Technical Documentation

POS-124-U-PFN
POS-124-U-ETC
POS-124-U-PDP[1]

Two axes positioning and synchronization control module with integrated fieldbus interface and SSI as well as analog sensor interface

Electronics
Hydraulics meets
meets Hydraulics
Electronics

[1] The picture shows the hardware of the ethernet based variations, the Profibus device contains a 9 pin D-SUB socket

CONTENTS

1 General Information ... 5
1.1 Order number ... 5
1.2 Scope of supply ... 5
1.3 Accessories ... 5
1.4 Symbols used ... 6
1.5 Legal notice ... 6
1.6 Safety instructions ... 7
2 Characteristics ... 8
2.1 Device description ... 9
3 Use and application ... 10
3.1 Installation instructions ... 10
3.2 Typical system structure ... 11
3.3 Method of operation ... 11
3.4 Commissioning ... 13
4 Technical description ... 14
4.1 Input and output signals ... 14
4.2 LED definitions ... 15
4.2.1 First section with USB ... 15
4.2.2 Second section (fieldbus) ... 15
4.3 Block Diagram ... 16
4.4 Typical wiring ... 17
4.5 Connection examples ... 17
4.6 Technical data ... 18
4.6.1 Common ... 18
4.6.2 Fieldbus ... 19
5 Parameters ... 20
5.1 Parameter overview ... 20
5.2 Basic parameters ... 23
5.2.1 MODE (Switching between parameter groups) ... 23
5.3 System parameters ... 23
5.3.1 LG (Changing the language for the help texts) ... 23
5.3.2 PDPADR (Profibus address) ... 23
5.3.3 PASSFB (Password fieldbus) ... 23
5.3.4 SENS (Malfunction monitoring) ... 24
5.3.5 SYS_RANGE (Working stroke) ... 24
5.3.6 HAND (Manual speed) ... 24
5.3.7 POSWIN (In-position monitoring range) ... 25
5.3.8 EOUT (Output signal: READY = OFF) ... 25
5.4 Input signal adaption ... 26
5.4.1 SELECT:X (Type of position sensors) ... 26
5.4.2 SSI:RES (Signal resolution) ... 26
5.4.3 SSI:BITS (Number of bits) ... 26
5.4.4 SSI:CODE (Signal coding) ... 27
5.4.5 SSI:ERRBIT (Position of the “out of range” bit) ... 27
5.4.6 SSI:POL (Direction of the sensor signal) ... 27
5.4.7 SIGNAL (Type of input) ... 27
5.4.8 N_RANGE (Nominal range of the sensor) ... 28
5.4.9 OFFSET (Sensor zero correction) ... 28
5.5 Positioning controller ... 29
5.5.1 VMODE (Selecting the control mode) ... 29

5.5.2 VRAMP (Ramp time for external speed demand) ... 29
5.5.3 ACCEL (Acceleration in NC mode) ... 29
5.5.4 VMAX (Maximum speed in NC Mode) ... 30
5.5.5 V_0 (Loop gain setting) ... 30
5.5.6 A (Acceleration ramp time) ... 31
5.5.7 D (Deceleration / braking distance) ... 31
5.5.8 D_1:S / D_2:S (Stop - Overtravel) ... 31
5.5.9 PT1 (Time response of the controller) ... 32
5.5.10 CTRL (Deceleration characteristics) ... 32
5.6 Synchronous controller ... 33
5.6.1 SYNCMODE (Operation mode synchronous run) ... 33
5.6.2 SYNCWIN (synchronization monitoring range) ... 34
5.6.3 SYNC (Control parameters) ... 34
5.7 Output signal adaption ... 35
5.7.1 MIN (Deadband compensation) ... 35
5.7.2 MAX (Output scaling) ... 35
5.7.3 TRIGGER (Response threshold for the MIN parameter) ... 35
5.7.4 OFFSET (Zero correction) ... 36
5.7.5 SIGNAL:U (Type and polarity of the output signal) ... 36
5.8 Drift compensation / high accurate positioning ... 37
5.8.1 DC:AV (Activation value) ... 38
5.8.2 DC:DV (Deactivation value) ... 38
5.8.3 DC:CR (Integrator limitation) ... 38
5.8.4 DC:I (Integration time) ... 38
5.9 Special commands ... 39
5.9.1 SELPLUS (additionally transmitted bus signals) ... 39
5.9.2 ETC_LOOP (Transfer rate) ... 39
5.9.3 DIAG (Query of the switch-off causes) ... 39
5.9.1 NEGW (Release of negative position setpoints) ... 40
5.9.2 AINMODE (Input scaling mode) ... 40
5.9.3 AIN (Analogue input scaling) ... 40
5.10 PROCESS DATA (Monitoring) ... 41
5.11 Status information ... 42
6 Common device functions ... 43
6.1 Failure monitoring ... 43
6.2 Troubleshooting ... 43
6.3 Remote control mode ... 45
7 EtherCAT IO interface ... 46
7.1 ETHERCAT CoE ... 46
7.2 EtherCAT installation ... 46
7.3 EtherCAT access handling ... 46
7.4 EtherCAT device profiles (ESI) ... 47
7.5 Standard Objects ... 48
8 Profinet IO RT interface ... 49
8.1 PROFINET IO function ... 49
8.2 Profinet Installation guideline ... 49
8.3 PROFINET address assignment ... 49
8.4 Device data file (GSDML) ... 50
9 Profibus DP interface ... 50
9.1 Profibus function ... 50
9.2 Installation guideline ... 50
9.3 Device data file (GSD) ... 50

10 Process data 51
10.1 Data sent to the device 51
10.1.1 Description of the bus signals 52
10.1.2 Coding of the control bits 54
10.2 Data sent to Fieldbus 56
10.2.1 Description of the bus signals 57
10.2.2 Coding of the status bits 58
11 Parameterizing via Fieldbus 60
11.1 Procedure 60
11.2 Parameter List 61
12 Profinet – Driver Blocks for Simatic – Controllers 62
12.1 TIA – Portal 62
12.2 STEP7 – classic 65
12.3 Common Properties 68
13 Notes 70

1 General Information

1.1 Order number

Two axes positioning controller with programmable output (±10 V differential voltage or 4… 20 mA), analogue or SSI sensor interface and optional synchronous control.

POS-124-U-PFN	Control via Profinet - IO interface
POS-124-U-ETC	Control via EtherCAT interface
POS-124-U-PDP	Control via Profibus DP interface

1.2 Scope of supply

The scope of supply includes the module including the terminal blocks which are a part of the housing.
The Profibus plug, interface cables and further parts which may be required should be ordered separately.
This documentation can be downloaded as a PDF file from www.w-e-st.de.

1.3 Accessories

WPC-300	Start-Up-Tool (download: www.w-e-st.de/produkte/software)

Any standard cable with USB-A and USB-B connector can be used as the programming cable.

1.4 Symbols used

General information

Safety-related information

1.5 Legal notice

W.E.St. Elektronik GmbH

Gewerbering 31
D-41372 Niederkrüchten

Tel.: +49 (0)2163 577355-0
Fax.: +49 (0)2163 577355 -11

Homepage: www.w-e-st.de
EMAIL: contact@w-e-st.de

Date: 08.01.2025

The data and characteristics described herein serve only to describe the product. The user is required to evaluate this data and to check suitability for the particular application. General suitability cannot be inferred from this document. We reserve the right to make technical modifications due to further development of the product described in this manual. The technical information and dimensions are non-binding. No claims may be made based on them.

This document is protected by copyright.

1.6 Safety instructions

Please read this document and the safety instructions carefully. This document will help to define the product area of application and to put it into operation. Additional documents (WPC-300 for the start-up software) and knowledge of the application should be taken into account or be available.
General regulations and laws (depending on the country: e.g. accident prevention and environmental protection) must be complied with.

These modules are designed for hydraulic applications in open or closed-loop control circuits. Uncontrolled movements can be caused by device defects (in the hydraulic module or the components), application errors and electrical faults. Work on the drive or the electronics must only be carried out whilst the equipment is switched off and not under pressure.

This handbook describes the functions and the electrical connections for this electronic assembly. All technical documents which pertain to the system must be complied with when commissioning.

This device may only be connected and put into operation by trained specialist staff. The instruction manual must be read with care. The installation instructions and the commissioning instructions must be followed. Guarantee and liability claims are invalid if the instructions are not complied with and/or in case of incorrect installation or inappropriate use.

CAUTION!
All electronic modules are manufactured to a high quality. Malfunctions due to the failure of components cannot, however, be excluded. Despite extensive testing the same also applies for the software. If these devices are deployed in safety-relevant applications, suitable external measures must be taken to guarantee the necessary safety. The same applies for faults which affect safety. No liability can be assumed for possible damage.

Further instructions

- The module may only be operated in compliance with the national EMC regulations. It is the user’s responsibility to adhere to these regulations.
- The device is only intended for use in the commercial sector.
- When not in use the module must be protected from the effects of the weather, contamination and mechanical damage.
- The module may not be used in an explosive environment.
- To ensure adequate cooling the ventilation slots must not be covered.
- The device must be disposed of in accordance with national statutory provisions.

2 Characteristics

This electronic module has been developed for controlling hydraulic positioning drives.

Both axes can be controlled independently or also be driven in synchronous mode via fieldbus.

The differential outputs are provided for the control of proportional valves with integrated or external electronics (with differential input). Alternatively the output can be parameterized to 4… 20 mA. This module is intended for the connection with analogue position sensors 0...10V or 4...20mA (scalable) or digital SSI sensor interfaces.

The internal monitoring sends information about error and operating states via the fieldbus connection to the master controller. The operational readiness is reported via a digital output, too.

Typical applications: Positioning control or synchronization control with hydraulic axes.

Features

- **Two independent positioning axes**
- **Can be combined for synchronized control**
- **Command position value parameter, actual value response, control bytes and status bytes via integrated fieldbus interface**
- **SSI-Sensor interface or analogue sensor interface (0….10V or 4…20mA)**
- **Simple and user-friendly sensor scaling**
- **Position resolution of 0.005 mm/s**
- **Principle of stroke-dependent deceleration for the shortest positioning time or NC profile generator for constant speed**
- **Highly accurate positioning**
- **Advanced position control with PT1 controller, Drift compensation and Fine positioning**
- **Superimposed synchronization controller with PT1 (optimal for hydraulic applications)**
- **Optimal use with zero lapped control valves**
- **Synchronization control in Master/Slave or average value mode**
- **Fault diagnosis and extended function checking**
- **Simplified parameterization with WPC-300 software**

2.1 Device description

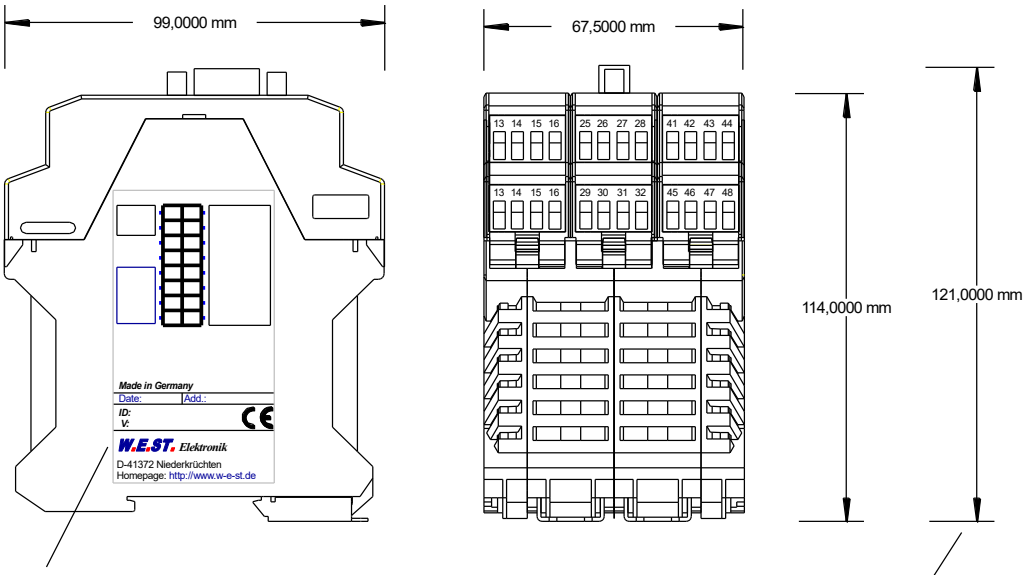

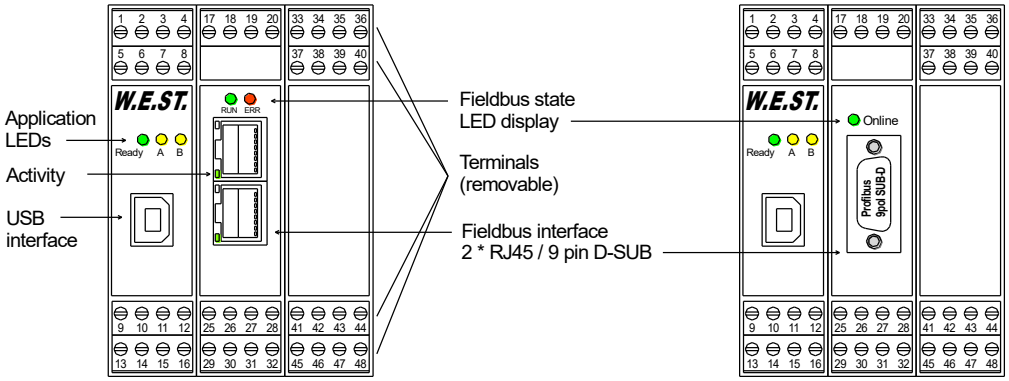

3 Use and application

3.1 Installation instructions

- This module is designed for installation in a shielded EMC housing (control cabinet). All cables which lead outside must be screened; complete screening is required. It is also a requirement that no strong electro-magnetic interference sources are installed nearby when using our control and regulation modules.

- **Typical installation location:** 24V control signal area (close to PLC)
  The devices must be arranged in the control cabinet so that the power section and the signal section are separate from each other.
  Experience shows that the installation space close to the PLC (24 V area) is most suitable. All digital and analogue inputs and outputs are fitted with filters and surge protection in the device.

- The module should be installed and wired in accordance with the documentation bearing in mind EMC principles. If other consumers are operated with the same power supply, a star- connected ground wiring scheme is recommended. The following points must be observed when wiring:
  - The signal cables must be laid separately from power cables.
  - Analogue signal cables **must be shielded.**
  - All other cables must be screened if there are powerful interference sources (frequency converters, power contactors) and cable lengths > 3m. Inexpensive SMD ferrites can be used with high-frequency radiation.
  - The screening should be connected to PE (PE terminal) as close to the module as possible. The local requirements for screening must be taken into account in all cases. The screening should be connected to at both ends. Equipotential bonding must be provided where there are differences between the connected electrical components.
  - With longer lengths of cable (>10 m) the diameters and screening measures should be checked by specialists (e.g. for possible interference, noise sources and voltage drop). Particular care is required with cables of over 40 m in length – the manufacturer should be consulted if necessary.

- A low-resistance connection between PE and the mounting rail should be provided. Transient interference is transmitted from the module directly to the mounting rail and from there to the local earth.
- Power should be supplied by a regulated power supply unit (typically a PELV system complying with IEC364-4-4, secure low voltage). The low internal resistance of regulated power supplies gives better interference voltage dissipation, which improves the signal quality of high-resolution sensors in particular. Switched inductances (relays and valve coils connected to the same power supply) must <u>always</u> be provided with appropriate overvoltage protection directly at the coil.

3.2 Typical system structure

This minimal system consists of the following components:

(*1) Proportional valve with OBE
(*2) Hydraulic cylinder
(*3) Position sensor
(*4) interface to PLC with analogue and digital signals
(*5) POS-124-U control module

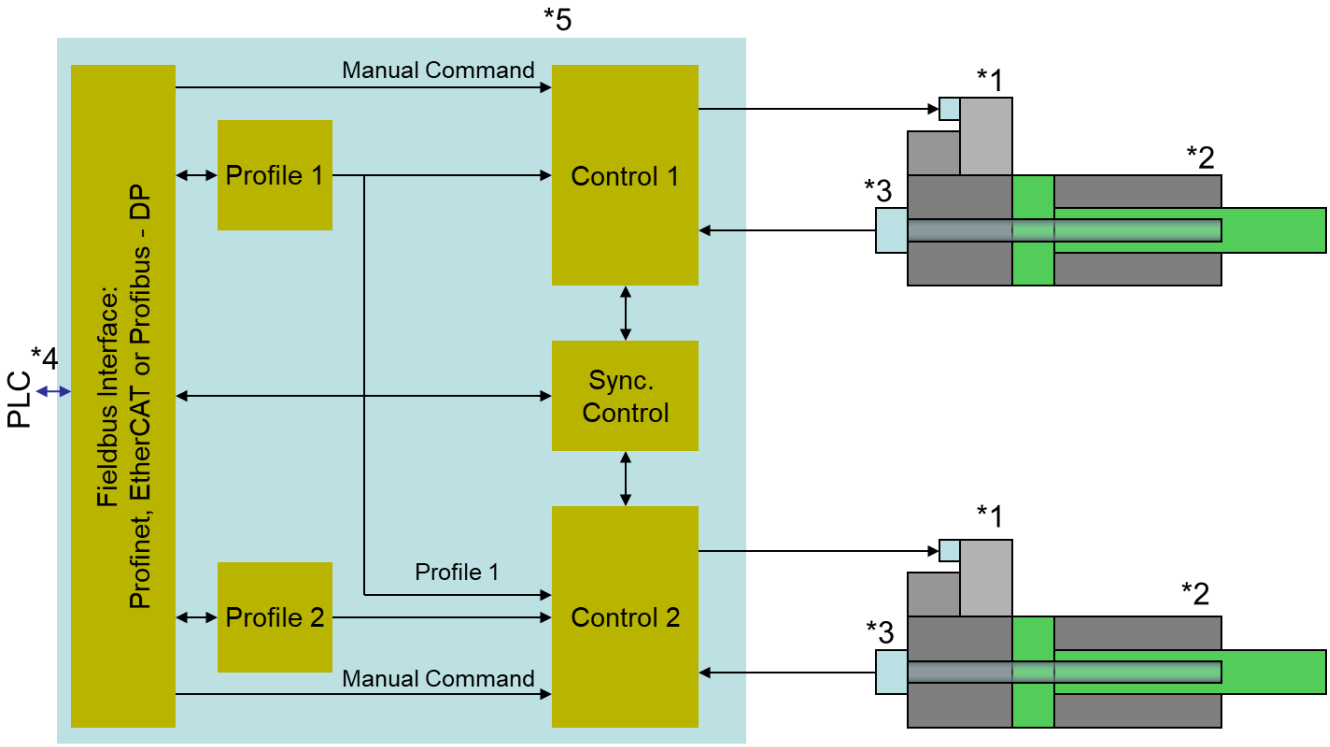

3.3 Method of operation

This control module supports simple point-to-point positioning with hydraulic drives. The system works based on the principle of stroke-dependent deceleration, i.e. the control gain (deceleration stroke) is set via parameters **D:A** and **D:B**. Alternatively it can be used in NC mode by setting the loop gain parameters and maximum speed. In this mode the drive will move with controlled velocity to the target position. The movement profile will be calculated by giving acceleration and speed demand.

The deceleration characteristics can be set linearly (**LIN**) or approximately quadratically (**SQRT1**) via the **CTRL** parameter. For normal proportional valves **SQRT1** is the input setting.

For control valves with a linear flow curve it depends on the application. If **LIN** is selected for these valves a significantly shorter deceleration distance can often be set (**D:A** and **D:B**).

Positioning sequence:

The positioning is controlled via Fieldbus. After switching on the ENABLE input, the command position (or target position) is set equal to the actual position of the sensor and the axis stays in closed loop position control mode. The READY output indicates that the system is generally ready for operation. After setting the START-signal, the preset command value will be taken over. The axis immediately will drive to this new command position and indicates reaching it by setting the InPos output.

The Poswin output stays active as long as the axis is within the preset Poswin window and the START input is active. The driving velocity is regulated by a signal received by the fieldbus interface. The axis moves with a limited speed according to this preset value.

The axis can be driven in manual mode (START is off) using the control bits HAND+ or HAND-. The velocity is programmable. When the HAND signal is deactivated, the command position is set to the actual position and the system stays in closed loop position control mode.

Setting the synchronous bit (GL) will synchronize both axes and the synchronization controller is overriding the position controller of axes 2. Axes 2 is now following axes 1 according to the master-slave-principle.

In order to achieve a reliable synchronous control, the maximum speed should be limited to about 70… 80 % of the possible speed. For compensating for deviations the slave axis must have the ability to move faster than the master axis. This control margin is necessary and has to be considered during the system design.

Influences on positioning accuracy:

The positioning accuracy is determined by the hydraulic and mechanical conditions. The right choice of valve is therefore a decisive factor. In addition, two mutually contradictory requirements (short position time and high accuracy) must be taken into account when designing the system.
The electronic limitations lie mainly in the resolution of the analogue signals, although with our modules a resolution of < 0.01% only needs to be considered with long positions. In addition, the linearity of the individual signal points (PLC, sensor and control module) must be considered. The worst-case scenario is that a system-specific absolute fault occurs.
The repeat accuracy is, however, not affected by this.

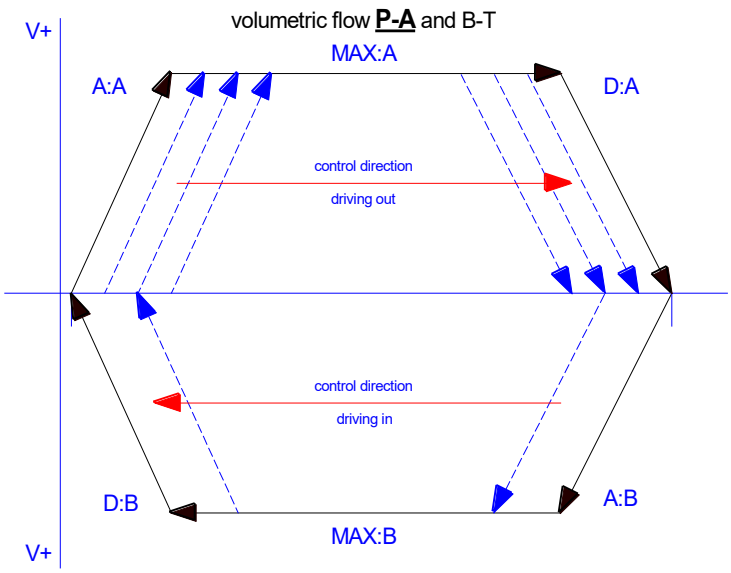

3.4 Commissioning

Step	Task
Installation	Install the device in accordance with the circuit diagram. Ensure it is wired correctly and that the signals are well shielded. The device must be installed in a protective housing (control cabinet or similar).
Switching on for the first time	Ensure that no unwanted movement is possible in the drive (e.g. switch off the hydraulics). Connect an ammeter and check the current consumed by the device. If it is higher than specified there is an error in the wiring. Switch the device off immediately and check the wiring.
Setting up communication	Once the power input is correct the PC (notebook) should be connected to the serial interface. Please see the WPC-300 program documentation for how to set up communication. Further commissioning and diagnosis are supported by the operating software.
Pre-parameterisation	Now set up the following parameters (with reference to the system design and circuit diagrams): SYSRANGE, SENSOR SETTINGS, POLARITY, ACCELERATION and DECELERATION. Pre-parameterisation is necessary to minimise the risk of uncontrolled movements. Parameterise specific settings for the control element (MIN for following error compensation and MAX for maximum velocity). Reduce the speed limitation to a value which is uncritical for the application.
Control signals	Check the control signal with a voltmeter. The control signals (PIN 15 to PIN16 and PIN19 to PIN20) lies in the range of ± 10V. In the current state it should show 0V. Alternatively, if current signals are used, approx. 0 mA should flow. **CAUTION!** This signal depends on the EOUT setting.
Fieldbus communication	Activate the fieldbus communication and check whether the right values and bits are send to the module.
Switching on the hydraulics	The hydraulics can now be switched on. The module is not yet generating a signal. Drives should be at a standstill or drift slightly (leave its position at a slow speed).
Activating ENABLE	**CAUTION!** Drives can now leave their position and move to an end position at full speed. Take safety measures to prevent personal injury and damage. Drives stay in the current position (with ENABLE the actual position is accepted as the required position). If the drive moves to an end position, the polarity is probably wrong.
Activating START	With the start signal the demand value on the analogue demand value input is accepted and the axis moves to the predefined target position. If START is disabled the axis stops in the preset deceleration distance D:S.
Manual (HAND) operation	If START is disabled the axis can be moved manually with HAND+ or HAND- . After disabling the HAND signal, the axis stops in a controlled manner at the current position.
Optimize controller	Now optimize the controller parameters according to your application and your requirements.

4 Technical description

4.1 Input and output signals

Connection	Supply
PIN 3	Power supply control module (see technical data)
PIN 31	Power supply Profibus extension (see technical data)
PIN 35	Power supply SSI extension (see technical data)
PIN 4	0 V (GND) connection control module.
PIN 32	0 V (GND) connection Profibus extension.
PIN 36	0 V (GND) connection SSI extension.
Connection	**Analogue signals**
PIN 11	0 V (GND), potential for analogue input signals, internally connected to PIN 4
PIN 12	0 V (GND), potential for analogue output signals, internally connected to PIN 4
PIN 13	Analogue position actual value (X1), signal range 0… 10V or 4… 20 mA, scalable
PIN 14	Analogue position actual value (X2), signal range 0… 10V or 4… 20 mA, scalable
PIN 15 / 16 (V) PIN 15 / 12 (mA)	Valve control signal axis 1. Type of signal and polarity can be selected by the parameter SIGNAL:U1.
PIN 19 / 20 (V) PIN 19 / 18 (mA)	Valve control signal axis 2. Type of signal and polarity can be selected by the parameter SIGNAL:U2.
Connection	**SSI sensors**
PIN 33	Power supply for sensor 1
PIN 34	0 V (GND) for sensor 1
PIN 37	CLK +
PIN 38	CLK -
PIN 39	DATA +
PIN 40	DATA -
PIN 47	Power supply for sensor 2
PIN 48	0 V (GND) for sensor 2
PIN 41	CLK +
PIN 42	CLK -
PIN 43	DATA +
PIN 44	DATA -
Connection	**Digital inputs and outputs**
PIN 8	**Enable input:** This digital input signal initializes the application. In combination with the software enable the corresponding axis will be approved.
PIN 1	**READY output:** **ON:** The module is enabled; there are no discernible errors. **OFF:** Enable is deactivated or an error has been detected.

4.2 LED definitions

4.2.1 First section with USB

LEDs	Description of the LED function
GREEN	Identical to the READY output. OFF: No power supply or ENABLE is not activated ON: System is ready for peration Flashing: Error discovered Only active when SENS = ON
YELLOW A	STATUS output. OFF: The axis 1 is outside the INPOS window. ON: The axis 1 is within the INPOS window.
YELLOW B	STATUS output. OFF: The axis 2 is outside the INPOS window. ON: The axis 2 is within the INPOS window.
GREEN + YELLOW A+B	1. **Chasing light (over all LEDs):** The bootloader is active. No normal functions are possible. 2. **All LEDs flash shortly every 6 s:** An internal data error was detected and corrected automatically! The module still works regularly. To acknowledge the error the module has to be cycle powered.
YELLOW A + YELLOW B	**Both yellow LEDs flash oppositely every 1 s:** The nonvolatile stored parameters are inconsistent! To acknowledge the error, the data have to be saved with the SAVE command or the corresponding button in the WPC.

4.2.2 Second section (fieldbus)

LEDs Ethernet	Description of the LED function
GREEN at the ports	Green LEDs shows network traffic at the relating port. OFF: No connection available ON(pulse): Active network connected Flashing: Existing data traffic
GREEN	The green RUN LED indicates the status of the central communication processor. OFF: Bus not started / Initializing Flashing: EtherCAT: Safe Operational / Profinet: Wait for data Flickering: EtherCAT: - / Profinet: Failure ON: Connected and active
RED	The red ERR LED indicates a faillure state OFF: No Error. Flashing: EtherCAT: No communication / Profinet: Node flash test ON: Profinet: Failure in the data communication
LED Profibus	**Description of the LED function**
GREEN	Green LED shows status of the Profinet connection. OFF: Profibus not connected. ON: Profibus connection established.

4.3 Block Diagram

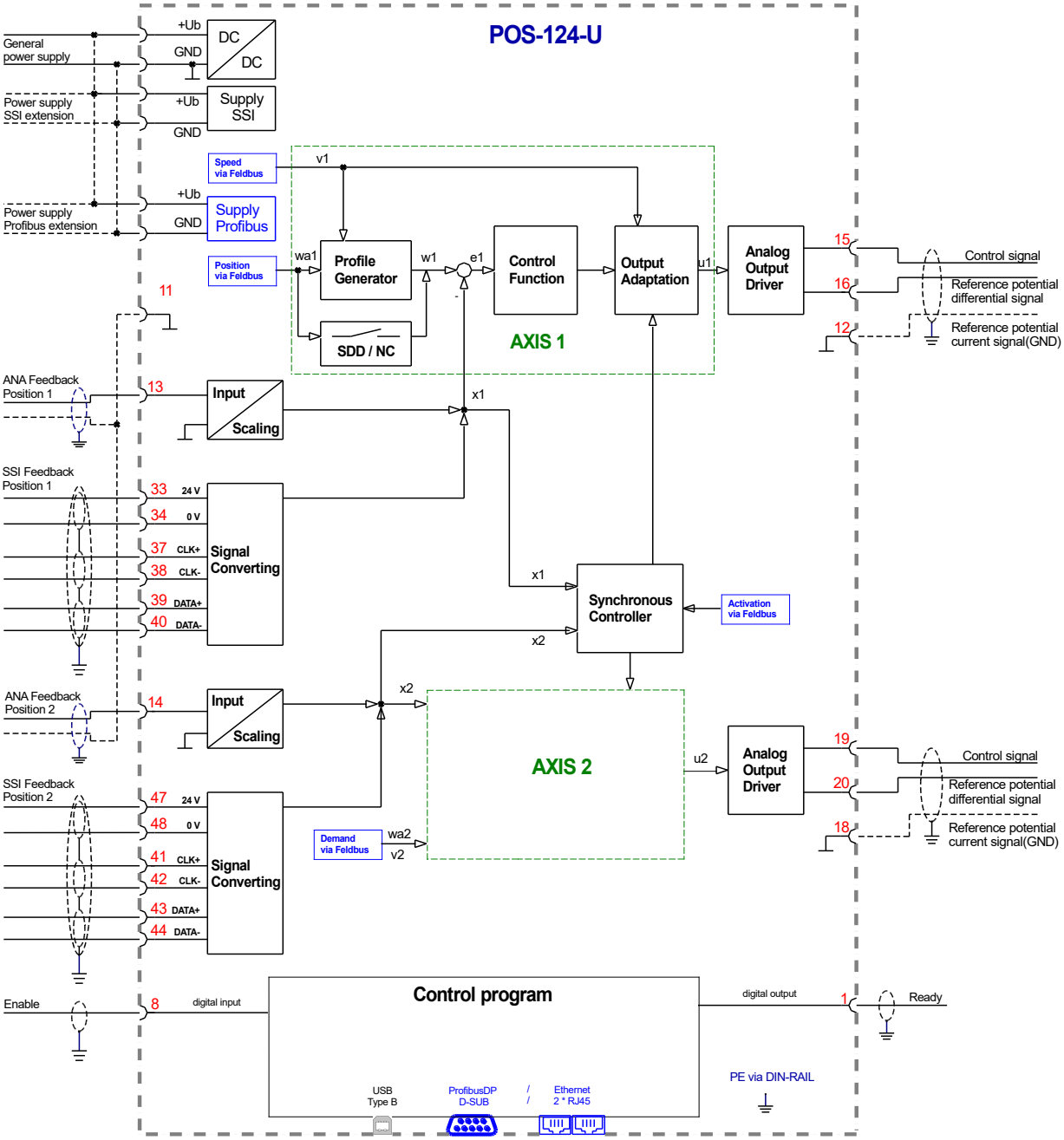

4.4 Typical wiring

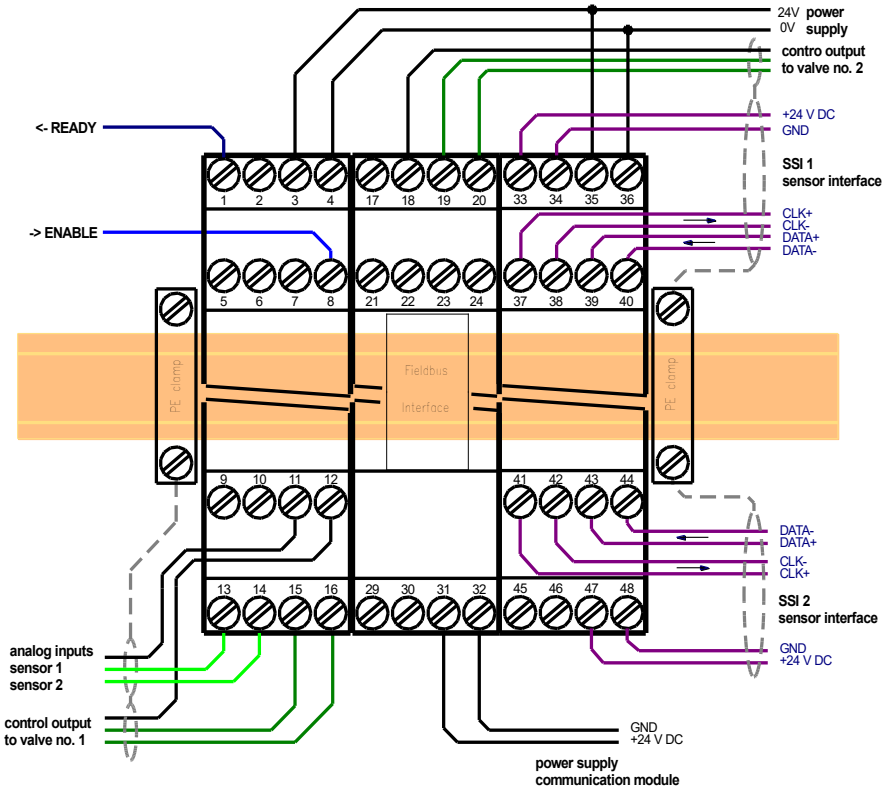

4.5 Connection examples

0... 10 V feedback signal

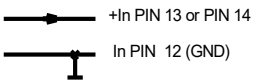

z. B. 24 V

sensor with 4... 20 mA (two wire connection)

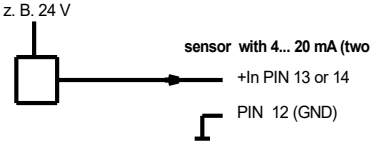

AIN:W 2000 1600 2000 C (für 0... 100%)

Valve (6 + PE plug) with OBE electronics

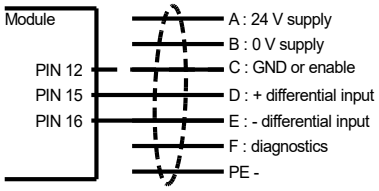

z. B. 24 V

sensor with 4... 20 mA (three wire connection)

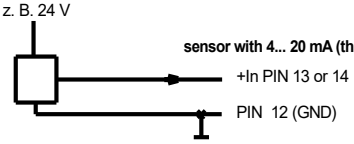

AIN:W 2000 1600 2000 C (für 0... 100%)

4.6 Technical data

4.6.1 Common

Supply voltage (Ub) Current requirement External protection	**[VDC]** **[mA]** **[A]**	24 (±10 %) 500 1 medium time lag
Digital inputs OFF ON Input resistance	 **[V]** **[V]** **[kOhm]**	 < 2 > 10 25
Digital outputs OFF ON Maximum current	 **[V]** **[V]** **[mA]**	 < 2 max. Ub 50
Analogue inputs Voltage Input resistance Signal resolution Current Burden Signal resolution	 **[V]** **[kOhm]** **[%]** **[mA]** **[Ohm]** **[%]**	 0… 10 min. 25 0.003 incl. Oversampling 4… 20 240 0.006 incl. Oversampling
Analogue outputs Voltage Maximum load Current Maximum load Signal resolution	 **[V]** **[mA]** **[mA]** **[Ohm]** **[%]**	 +/- 10 differential 10 4… 20 390 0.007
SSI interface Transmission rate	**-** **[kBaud]**	RS-422 Specification 120
Signal processing sample time	**[ms]**	1
Serial interface Transmission rate	**-** **[kBaud]**	USB - virtual COM Port 9.6… 115.2
Housing		Snap-on module to EN 50022 PA 6.6 polyamide Flammability class V0 (UL94)
Weight	**[kg]**	0.310
Protection class Temperature range Storage Temperature Humidity	 **[°C]** **[°C]** **[%]**	IP20 -20… 60 -20... 70 < 95 (non-condensing)
Connections		USB-B 4-pole terminal blocks PE: via the DIN mounting rail
EMC		EN 61000-6-2: 8/2005 EN 61000-6-4: 6/2007 + A1:2011

4.6.2 Fieldbus

EtherCat		
Transmission rate	**[Mbit/s]**	100
Standard	**[IEE]**	802.3
Connections	**-**	RJ45 in, RJ45 out
Profinet IO		
Transmission rate	**[Mbit/s]**	100
Conformity	**-**	CC-B
Connections	**-**	2 * RJ45
Profibus DP	**-**	
Transmission rate	**[kBit/s]**	9.6,19.2,93.75,187.5,500,1500,3000,6000,12000
ID Number	**-**	1810h
Connections	**-**	9 pol. D-SUB

5 Parameters

5.1 Parameter overview

Group	Command	Default	Unit	Description
Basic parameter				
	MODE	SYSTEM	-	Parameter view
System settings				
	LG	EN	-	Changing language help texts
	PDPADR	126	-	Profibus adress (only with the PDP variant)
	PASSFB	0	-	Password for fieldbus parameterizing
	SENS	ON	-	Malfunction monitor
Axis 1				
	SYS_RANGE_1	100	mm	Axis working stroke
	HAND_1:A HAND_1:B	3330 -3330	0.01 % 0.01 %	Output signal in manual mode
	POSWIN_1:S POSWIN_1:D	200 5000	µm µm	Target window for position status messages
	EOUT_1	0	0.01 %	Output signal if not ready
Axis 2				
	SYS_RANGE_2	100	mm	Axis working stroke
	HAND_2:A HAND_2:B	3330 -3330	0.01 % 0.01 %	Output signal in manual mode
	POSWIN_2:S POSWIN_2:D	200 5000	µm µm	Target window for position status messages
	EOUT_2	0	0.01 %	Output signal if not ready
Input signal adaption				
	SELECT:X	SSI	-	Selecting sensor signals
	SSI:RES	100	10 nm	Sensor resolution
	SSI:BITS	24	-	Number of transmitted bits
	SSI:CODE	GRAY	-	Type of transmission code
	SSI:ERRBIT	0	-	Position of the error bits
Axis 1				
	SSI_1:POL	+	-	Sensor polarity
	SIGNAL_1:X	U0-10	-	Type of analogue input
	N_RANGE_1:X	100	mm	Nominal range of the sensor
	OFFSET_1:X	0	µm	Offset of the sensors
Axis 2				
	SSI_2:POL	+	-	Sensor polarity
	SIGNAL_2:X	U0-10	-	Type of analogue input
	N_RANGE_2:X	100	mm	Nominal range of the sensor
	OFFSET_2:X	0	µm	Offset of the sensors

Group	Command	Default	Unit	Description
Positioning controller				
Axis 1				
	VMODE_1	SDD	-	Method of positioning
	VRAMP_1	100	ms	Speed ramp time
	PT1_1	1	ms	PT1-filter time constant
	CTRL_1	SQRT1	-	Control characteristic
	D_1:S	10	mm	STOP - Overtravel
Profile generator (NC)				
	ACCEL_1	250	mm/s²	Acceleration
	VMAX_1	50	mm/s	Maximum velocity
	V0_1:A **V0_1:B** **V0_1:RES**	10 10 1	1/s 1/s -	Loop gain Loop gain resolution
Control parameters (SDD)				
	A_1:A **A_1:B**	100 100	ms ms	Acceleration time
	D_1:A **D_1:B**	25 25	mm mm	Deceleration stroke
Axis 2				
	VMODE_2	SDD	-	Method of positioning
	VRAMP_2	100	ms	Speed ramp time
	PT1_2	1	ms	PT1-filter time constant
	CTRL_2	SQRT1	-	Control characteristic
	D_2:S	10	mm	STOP - Overtravel
Profile generator (NC)				
	ACCEL_2	250	mm/s²	Acceleration
	VMAX_2	50	mm/s	Maximum velocity
	V0_2:A **V0_2:B** **V0_2:RES**	10 10 1	1/s 1/s -	Loop gain Loop gain resolution
Control parameters (SDD)				
	A_2:A **A_2:B**	100 100	ms ms	Acceleration time
	D_2:A **D_2:B**	25 25	mm mm	Deceleration stroke
Synchronous run				
	SYNCMODE	MS	-	Synchronization mode
	SYNCWIN	5000	µm	Synchronization error window
	SYNC:P **SYNC:V0** **SYNC:T1**	50 10 80	mm s^{-1} ms	P gain (deceleration stroke, SDD) Loop gain (NC) Time constant
Output signal adaption				

Group	Command	Default	Unit	Description
Axis 1				
	MIN_1:A **MIN_1:B**	0 0	0.01 % 0.01 %	Deadband compensation
	MAX_1:A **MAX_1:B**	10000 10000	0.01 % 0.01 %	Output scaling
	TRIGGER_1	200	0.01 %	Deadband compensation trigger point
	OFFSET_1	0	0.01 %	Offset value for the output
	SIGNAL_1:U	U+-10	-	Type and polarity of output signals
Axis 2				
	MIN_2:A **MIN_2:B**	0 0	0.01 % 0.01 %	Deadband compensation
	MAX_2:A **MAX_2:B**	10000 10000	0.01 % 0.01 %	Output scaling
	TRIGGER_2	200	0.01 %	Deadband compensation trigger point
	OFFSET_2	0	0.01 %	Offset value for the output
	SIGNAL_2:U	U+-10	-	Type and polarity of output signals
Extended functions				
Fine positioning / drift compensation				
Axis 1				
	DC_1:AV **DC_1:DV** **DC_1:I** **DC_1:CR**	0 0 2000 500	0.01 % 0.01 % ms 0.01 %	Point of activation Point of deactivation Time constant of the integrator function Limit of the control range
Axis 2				
	DC_2:AV **DC_2:DV** **DC_2:I** **DC_2:CR**	0 0 2000 500	0.01 % 0.01 % ms 0.01 %	Point of activation Point of deactivation Time constant of the integrator function Limit of the control range
Additionally transmitted bus signals				
	SELPLUS:1 **SELPLUS:2**	- -	- -	Selection of additional signal 1 Selection of additional signal 2
Special commands				
Terminal commands				
	AINMODE	EASY	-	Input scaling mode
	NEGW	OFF	-	Release of negative position setpoints
Only available at EtherCat devices				
	ETC_LOOP	NORMAL|FAST	-	Cycle time of the data transfer.
Free input scaling				
	AIN_1:X **AIN_2:X**	A: 1000 B: 1000 C: 0 X: V	- - 0.01 % -	Free scaling of the analogue inputs. Replaces SIGNAL, N_RANGE and OFFSET if AINMODE was set to MATH.

5.2 Basic parameters

5.2.1 MODE (Switching between parameter groups)

Command	Parameters	Unit	Group
MODE X	x= SYSTEM|IO_CONF|POS_1| POS_2|SYNC|EXTRA|ALL	-	**BASIC**

This command switches between several views on the parameter table. In order to improve the clearness only the parameters belonging to the chosen group are displayed. There is also an option available to show all active parameters at once.

5.3 System parameters

5.3.1 LG (Changing the language for the help texts)

Command	Parameters	Unit	Group
LG X	x= DE|EN	-	**SYSTEM**

Either German or English can be selected for the help texts.

5.3.2 PDPADR (Profibus address)

Command	Parameters	Unit	Group
PDPADR X	x= 1...126	-	**SYSTEM**

This parameter only exists for the PDP variant.
Slave address in the Profibus network.

5.3.3 PASSFB (Password fieldbus)

Command	Parameters	Unit	Group
PASSFB X	x= 0… 10000000	-	**SYSTEM**

The value inputted here serves as password for the parameterizing via fieldbus. For enabling parameterization, it has to be sent via fieldbus to the relating address. For a value of “0” the password protection is deactivated.

5.3.4 SENS (Malfunction monitoring)

Command		Parameters	Unit	Group
SENS	X	x= ON|OFF|AUTO	-	**SYSTEM**

This command is used to activate/deactivate the monitoring functions of the module.

ON: All monitoring functions are active. Detected failures can be reset by deactivating the ENABLE input.

OFF: No monitoring function is active.

AUTO: Auto reset mode. All monitoring functions are active. If the failure does not exist anymore, the module automatically resumes to work.

Normally the monitoring functions are always active because otherwise no errors are detectable via the READY output. Deactivating is possible mainly for troubleshooting.

5.3.5 SYS_RANGE (Working stroke)

Command		Parameters	Unit	Group
SYS_RANGE_1	X	x= 10… 10000	mm	**SYSTEM**
SYS_RANGE_2	X	x= 10… 10000	mm	

This command defines the full stroke, which corresponds to 100 % of the input signal. If the demand is set incorrectly, this leads to incorrect system settings, and the dependent parameters such as speed and gain cannot be calculated correctly.

5.3.6 HAND (Manual speed)

Command		Parameters	Unit	Group
HAND_1:i	X	i= A|B		**SYSTEM**
HAND_2:i	X	x= -10000… 10000	0.01%	

The manual speeds are set with these parameters. The drive moves in a controlled manner in the defined direction when the manual signal is active. The direction is defined by the sign of the parameters. After the manual signal has been disabled, the drive remains under control in the current position.

In case of a fault (position sensor fault), the drive can still be moved with the manual function. The output will be switched off when hand signals are turned off.

The manual speed is also limited by the (internal or external) speed demand (MIN evaluation).

Caution! Do not use the manual mode in conjunction with the EOUT command. After the deactivation of the HAND input the output is set to the EOUT value.

5.3.7 POSWIN (In-position monitoring range)

Command	Parameter	Unit	Group
POSWIN_1:i X POSWIN_2:i X	i= S|D x= 2… 200000	 µm	**SYSTEM**

This parameter is entered in µm.
The POSWIN command defines a range for which the POSWIN message is generated. This function monitors the difference between the command and actual position. If the error is less than the programmed value an POSWIN message is generated. The positioning process is not influenced by this message. START must be acivated to generate the POSWIN messages.

POSWIN:S Static, for monitoring the target position in SDD mode.

POSWIN:D Dynamic, for monitoring the following error in NC Mode[2].

5.3.8 EOUT (Output signal: READY = OFF)

Command	Parameters	Unit	Group
EOUT_1 X EOUT_2 X	x= -10000… 10000	0.01 %	**SYSTEM**

Output value in case of a detected error or a deactive ENABLE input. A value (degree of valve opening) for use in the event of a sensor error (or the module is disabled) can be defined here. This function can be used if, for example, the drive is to move to one of the two end positions (at the specified speed) in case of a sensor error.

|EOUT| = 0 The output is switched off in the event of an error. This is normal behavior.

CAUTION! If the output signal is 4… 20 mA, the output is switched off when **|EOUT| = 0**. If a null value = 12 mA is to be output in the event of an error, EOUT must be set to 1[3].

The output value defined here is stored permanently (independently of the parameter set). The effects should be analyzed by the user for each application from the point of view of safety.

Do not use the manual mode in conjunction with the EOUT command. After the deactivation of the HAND input the output is set to the EOUT value.

[2] POSWIN:D should always be set greater than POSWIN:S . With POSWIN:D the increasing following error can be detected (e.g. through high external force). In SDD mode both signals are equal.

[3] This is necessary if using valves without error detection for signals lower than 4 mA. If the valve has an error detection, it moves into a defined position after switching off the output.

5.4 *Input signal adaption*

5.4.1 SELECT:X (Type of position sensors)

Command	Parameters	Unit	Group
SELECT X	x= SSI|ANA	-	**INPUT**

With this parameter, the appropriate sensor type can be activated.

SSI: The SSI sensor interfaces are active. The SSI sensors have to be adjusted via the SSI commands to the sensors. The relevant sensor data must be available.

ANA: The analog sensor interfaces are active.

The SSI interface is suitable for digital position sensor. The internally processed accuracy is 1 micron.

CAUTION: The two SSI sensors must be of the same type, i.e. the resolution of the sensor, the number of bits transmitted and the transmission coding must be the same!

5.4.2 SSI:RES (Signal resolution)

Command	Parameters	Unit	Group
SSI:RES X	x= 100… 10000	0.01 µm	**INPUT**

This command defines the signal resolution of the sensor. Data entry has a resolution of 10 nm (nanometers or 0.01 micron). If the sensor has one-micron resolution, the value must be set to 100. This makes it possible to scale rotational sensors too.
Take the data from the sensor's data sheet.

5.4.3 SSI:BITS (Number of bits)

Command	Parameters	Unit	Group
SSI:BITS X	x= 8… 31	-	**INPUT**

With this command the number of data bits can be set.
Take the data from the sensor's data sheet.

5.4.4 SSI:CODE (Signal coding)

Command	Parameters	Unit	Group
SSI:CODE X	x= GRAY|BIN	-	**INPUT**

With this command the signal coding can be chosen. Take the data from the sensor's data sheet.

5.4.5 SSI:ERRBIT (Position of the "out of range" bit)

Command	Parameter	Unit	Group
SSI:ERRBIT X	x= 0… 31	-	**INPUT**

The position of the error bit will be defined by this parameter.
The appropriate data can be found in the sensor's data sheet. In case of no described error bit, the default value is 0 (deactivation of the monitoring).

5.4.6 SSI:POL (Direction of the sensor signal)

Command	Parameters	Unit	Group
SSI_1:POL1 X SSI_2:POL2 X	x= +|-	-	**INPUT**

To reverse the working direction of the sensor, with this command the polarity can be changed.

5.4.7 SIGNAL (Type of input)

Command	Parameter	Unit	Group
SIGNAL_1:X X SIGNAL_2:X X	x= OFF|U0-10|I4-20| U10-0|I20-4	-	**INPUT**

This command can be used to change the type of input signal (voltages or current) and to define the direction of the signal. This command is available for the analogue feedback inputs.

OFF= Deactivation of the input.

5.4.8 N_RANGE (Nominal range of the sensor)

Command	Parameter	Unit	Group
N_RANGE_1:X X N_RANGE_2:X X	x= 10… 10000	mm	**INPUT**

N_RANGE (nominal range or nominal stroke) is used to define the length of the sensor. This value should be always higher or equal in comparison with SYS_RANGE. The control parameter cannot be calculated correctly in case of wrong values.

5.4.9 OFFSET (Sensor zero correction)

Command	Parameter	Unit	Group
OFFSET_1:X X OFFSET_2:X X	x= -100000… 100000	µm	**INPUT**

By these commands the zero-point of the axes can be adjusted.
The offset value is added to the control element signal at the output and limited to SYS_RANGE.

5.5 Positioning controller

5.5.1 VMODE (Selecting the control mode)

Command	Parameters	Unit	Group
VMODE_1 X VMODE_2 X	x= SDD|NC	-	**CONTROL**

The fundamental control structure can be changed with this parameter.

SDD: **S**troke-**D**ependent **D**eceleration. In this mode, stroke-dependent deceleration is activated. This mode is the default mode and is suitable for most applications. With stroke-dependent deceleration the drive comes to a controlled stop at the target position. From the set deceleration point the drive then switches to control mode and moves accurately to the desired position. This control structure is very robust and reacts insensitively to external influences such as fluctuating pressures. One disadvantage is that the speed varies with the fluctuating pressure as the system runs under open-loop control.

NC: **N**umerically **C**ontrolled. In this mode a position profile is generated internally. The system always works under control and uses the following error to follow the position profile. The magnitude of the following error is determined by the dynamics and the set control gain. The advantage is that the speed is constant (regardless of external influences) due to the profile demand. Because of continuous control, it is necessary not to run at 100% speed, as otherwise the errors cannot be corrected. 80% of the maximum speed is typical although especially the system behaviour and the load pressure should be taken into account when specifying the speed.

5.5.2 VRAMP (Ramp time for external speed demand)

Command	Parameters	Unit	Group
VRAMP_1 X VRAMP_2 X	x= 1… 2000	ms	**CONTROL**

The rate of change of the external speed demand can be limited by this ramp time. In NC mode, this value should be set to 10ms.

5.5.3 ACCEL (Acceleration in NC mode)

Command	Parameters	Unit	Group
ACCEL_1 X ACCEL_2 X	x= 1… 20000	mm/s	**CONTROL**

This command is used to define the acceleration in NC mode. The command is only active if the VMODE has been parameterized to NC. For stable operation it must be set to a value which is a little smaller than the technically possible acceleration. Experience shows that a factor of 3…5 should be considered.

5.5.4 VMAX (Maximum speed in NC Mode)

Command	Parameters	Unit	Group
VMAX_1 X VMAX_2 X	x= 1… 5000	mm/s	**CONTROL**

Specification of the maximum speed in NC Mode. This value is defined by the drive system and should be specified as precisely as possible (not too high under any circumstances). The maximum speed is scaled with the external speed demand. The command is only active if the VMODE has been parameterized to NC.

If the speed differs between the two directions of movement the lower value should be entered.

5.5.5 V_0 (Loop gain setting)

Command	Parameters	Unit	Group
V0_1:I X V0_2:I X	i= A|B|RES x= 1… 200 RES: x= 1|100	s^{-1}	**CONTROL**

This parameter is specified in s^{-1} (1/s).
In NC Mode the loop gain is normally specified rather than the deceleration distance[4].

The internal gain is calculated from this gain value together with the VMAX and SYS_RANGE parameters.

$$D_i = \frac{v_{\max}}{V_0}$$

$$G_{Intern} = \frac{SYS_RANGE}{D_i}$$

Calculation of the internal control gain

In NC Mode the following error at maximum speed is calculated using the loop gain. This following error corresponds to the deceleration distance with stroke-dependent deceleration. The conversion and therefore also the calculation of the correct parameter value can be easily performed using this relationship.

With **V0:RES** the resolution can be changed in order to put in significant smaller values.

[4] The loop gain is alternatively defined as a KV factor with the unit (m/min)/mm or as Vo in 1/s. The conversion is KV = Vo/16.67.

5.5.6 A (Acceleration ramp time)

Command	Parameters	Unit	Group
A_1:i X A_2:i X	i= A|B x= 1… 5000	ms	**CONTROL**

Ramp function for the 1st and 3rd quadrants in SDD mode.

The acceleration time for positioning is depending on the direction. 'A' corresponds to connection 15 and 'B' corresponds to connection 16 (if POL = +). Normally A = flow P-A, B-T and B = flow P-B, A-T.

For quadrants 2 and 4, parameters D:A and D:B are used as the deceleration distance demand.

5.5.7 D (Deceleration / braking distance)

Command	Parameters	Unit	Group
D_1:i X D_2:i X	i= A|B x= 1… 10000	mm	**CONTROL**

This parameter is specified in mm[5].
The deceleration distance is set for each direction of movement (A or B). The control gain is calculated internally depending on the deceleration distance. The shorter the deceleration distance, the higher the loop gain. A longer deceleration distance should be specified in the event of instability.

$$G_{Intern} = \frac{SYS_RANGE}{D_i}$$ Calculation of control gain

5.5.8 D_1:S / D_2:S (Stop - Overtravel)

Command	Parameters	Unit	Group
D_1:S X D_2:S X	x= 1… 10000	mm	**CONTROL**

If the ENABLE signal is switched off, the output signal is always abruptly removed. If only the START bit is switched off before a movement is completed, the controller brakes the axis with a defined deceleration. This is set by the parameters D_1:S and D_2:S as the overtravel. After deactivating START, a new target position in relation to the speed (current position plus D:S) is calculated and specified as the setpoint. Higher values lead to smoother braking.

If the NC mode is selected, braking is compatible with previous versions for input values <= 10 mm. In this case, the lag distance serves as overtravel, i.e. the axis decelerates by immediately stopping the profile generator. This is usually a relatively hard reaction, which can be made softer by entering larger values.

[5] **CAUTION!** With older modules this parameter was specified in % of the maximum path. Since data specification for this module has now been converted to mm the relationship between the path (PATH command) and these parameters must be taken into account.

5.5.9 PT1 (Time response of the controller)

Command	Parameter	Unit	Group
PT_1 X PT_2 X	x= 0… 300	ms	**CONTROL**

The time response of the controller can be influenced via this parameter.
Hydraulic drives are often critical to control especially in case of high speeds and very fast valves. The PT1 filter can be used to improve the damping rate and allows therefore higher loop gains.

Requirements for the use are: The natural frequency of the valve should be equal or higher than the natural frequency of the drive.

5.5.10 CTRL (Deceleration characteristics)

Command	Parameters	Unit	Group
CTRL_1 X CTRL_2 X	x= LIN|SQRT1|SQRT2	-	**CONTROL**

The deceleration characteristic is set with this parameter. In case of overlapped proportional valves the SQRT function should be used. The non-linear flow function of these valves is linearized by the SQRT[6] function.

In case of zero lapped valves (control valves and servo valves) the LIN or SQRT1 function should be used regardless of the application. The progressive characteristic of the SQRT1 function has better positioning accuracy but can also lead to longer positioning times in individual cases.

LIN: Linear deceleration characteristic (gain factor is 1).

SQRT1: Root function for braking curve calculation. The gain is increased by a factor of 3 (in the target position). This is the default setting.

SQRT2: Root function for braking curve calculation. The gain is increased by a factor of 5 (in the target position). This setting should only be used with a significantly progressive flow through the valve.

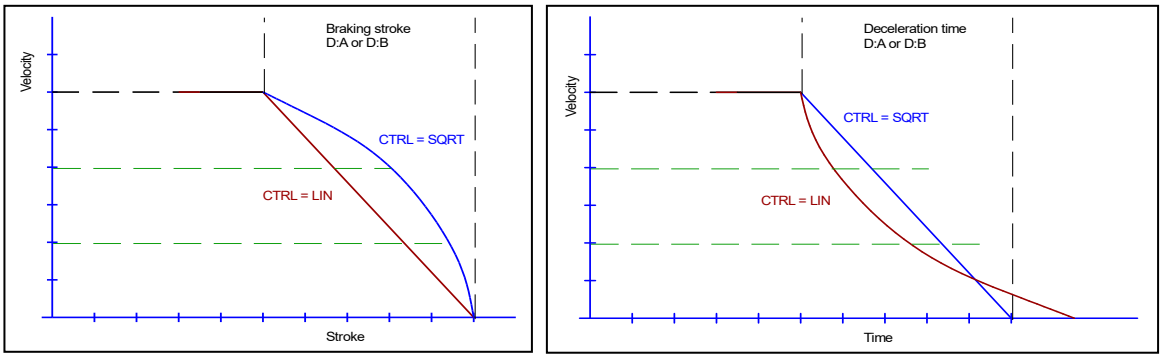

Figure 2 (Braking function with respect to stroke and time)

[6] The SQRT function generates constant deceleration and thus reaches the target position faster. This is achieved by increasing the gain during the deceleration process.

5.6 Synchronous controller

5.6.1 SYNCMODE (Operation mode synchronous run)

Command	Parameters	Unit	Group
SYNCMODE X	x= MS|AV	–	**SYNC_CTRL**

With this command the behavior of synchronization controller be selected

MS: Master Slave Control. Axis 2 is always the Slave

AV: Average value control

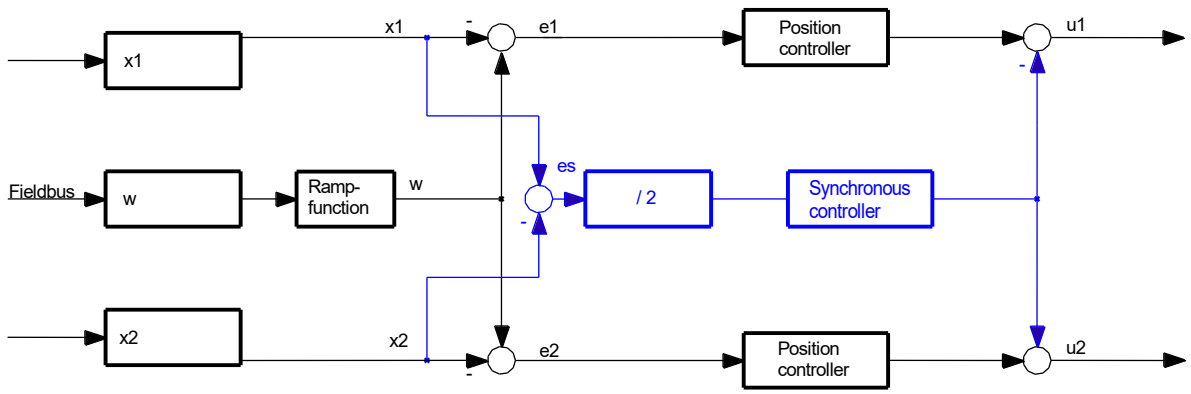

Picture 1: Control structure of the average value controller

Both actual positions are checked. The calculated average value serves as command value for the synchronous controller, which has an effect on both axes while trying to synchronize them. The lagging one will be accelerated and the advanced one decelerated.

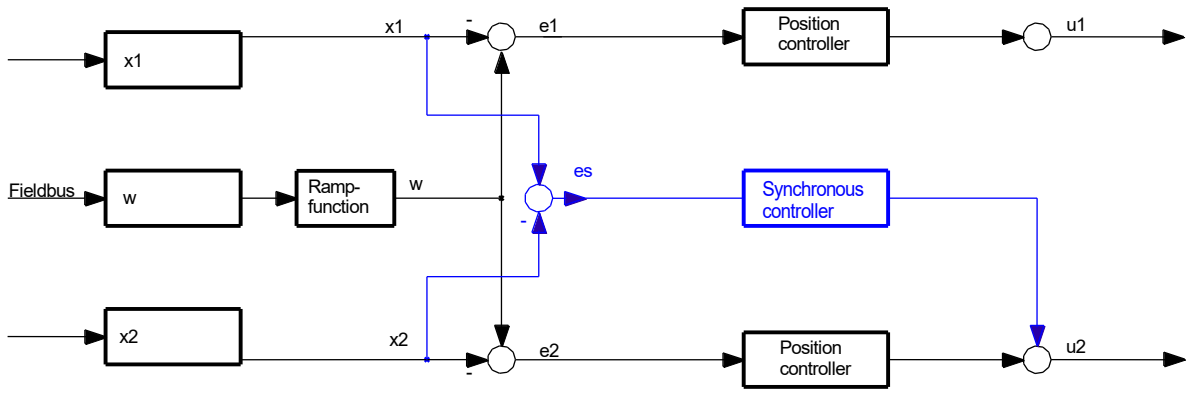

Picture 2: Control structure of the master / slave principle

The actual position of the master axis serves as command position for the synchronous controller. It exerts influence on the slave axis and tries to synchronize it to the master axis. Here, the parameterization should be adapted in a way that the master axis is speed – limited. Otherwise a lagging slave axis may not be able to compensate the synchronous error.

5.6.2 SYNCWIN (synchronization monitoring range)

Command	Parameter	Unit	Group
SYNCWIN_1:i X SYNCWIN_2:i X	x= 2… 200000	µm	**SYSTEM**

This parameter is entered in µm.
The SYNCWIN command defines a range for which the $\overline{GL - ERROR}$ message is generated. This function monitors the difference between the command and actual position. The controlling process is n ot influenced by this message and remains active.

SYNCMODE AV The average value of both axes is the demand value. Both axes are monitored.
SYNCMODE MS The difference between both axes is monitored. SYNCWIN_1 = SYNCWIN_2.

5.6.3 SYNC (Control parameters)

Commands	Parameter	Units	Group
SYNC:P X	x= 1… 10000	mm	**SYNC_CTRL**
SYNC:V0 X	x= 1… 400	s^{-1}	
SYNC:T1 X	x= 1… 300	ms	

These parameters are used to optimize the synchronization controller. The SYNC-controller works as a PT1 or PI compensator for optimized controlling of hydraulic drives. The parameter T1 effects a delayed action of the SYNC Controller. The stability of the compensator could be increased in critical cases with the up streamed T1 Filter.

In **SDD-mode** is specified with SYNC:P, the braking distance in mm. The gain will depend on the stopping distance is calculated internally. In short braking distance, the high gain is calculated. In the case of instability should be given a longer stopping distance.

In the **NC-mode** parameters of the SYNC: V0 is in s-1 (1 / s) specified. In this mode, the loop gain is entered.

The parameter SYNC: T1 causes a delayed action of the synchronized controller. The stability of the controller can be increased by the upstream T1-filter in critical cases.

5.7 Output signal adaption

5.7.1 MIN (Deadband compensation)

5.7.2 MAX (Output scaling)

5.7.3 TRIGGER (Response threshold for the MIN parameter)

Command	Parameters	Unit	Group
	i= A|B	-	**OUTPUT**
MIN_1:i X	x= 0… 6000	0.01 %	
MAX_1:i X	x= 3000… 10000	0.01 %	
TRIGGER_1 X	x= 0… 4000	0.01 %	
MIN_2:i X	x= 0… 6000	0.01 %	
MAX_2:i X	x= 3000… 10000	0.01 %	
TRIGGER_2 X	x= 0… 4000	0.01 %	

The output signal to the valve is adjusted by means of these commands. A kinked volume flow characteristic is used instead of the typical overlap step for the position controls. The advantage is a better and more stable positioning behavior. At the same time, a kinked volume flow characteristic of the valve can also be equalised with this compensation[7].

CAUTION: If there should also be adjustment options for deadband compensation on the valve or valve amplifier, it must be ensured that the adjustment is performed either at the power amplifier or in the module.

If the MIN value is set too high, this has an effect on the minimum speed, which can then no longer be adjusted. In extreme cases this leads to oscillation around the controlled position.

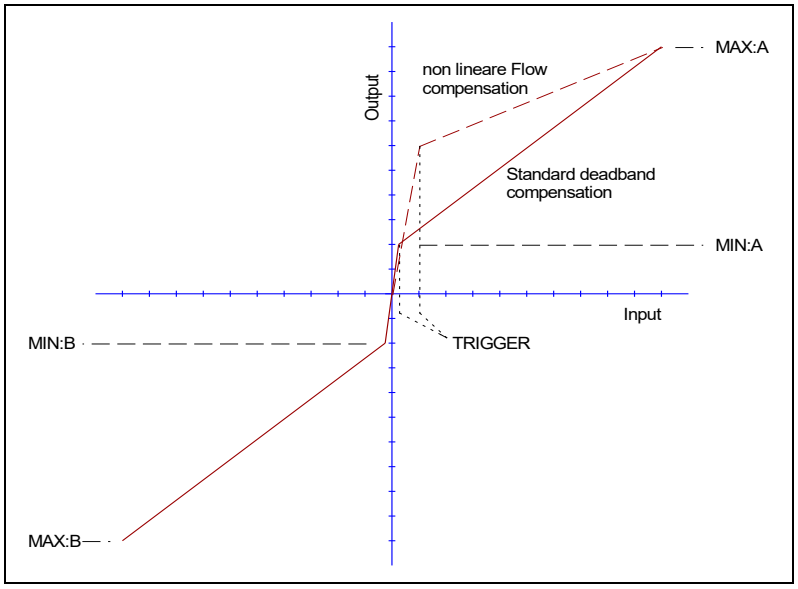

[7] Various manufacturers have valves with a defined nonlinear curve: e.g. a kink at 40 or 60 % (corresponding to 10 % input signal) of the nominal volume flow. In this case the TRIGGER value should be set to 1000 and the MIN value to 4000 (6000). If zero lapped or slightly underlapped valves are used, the volume flow gain in the zero range (within the underlap) is twice as high as in the normal working range. This can lead to vibrations and jittery behavior. To compensate this, the TRIGGER value should be set to approximately 200 and the MIN value to 100. The gain in the zero point is thus halved and an overall higher gain can often be set.

5.7.4 OFFSET (Zero correction)

Command	Parameters	Unit	Group
OFFSET_1 X OFFSET_2 X	x= -4000… 4000	0.01 %	**OUTPUT**

This parameter is entered in 0.01% units.
The offset value is added to the output value. Valve zero offsets can be compensated with this parameter.

5.7.5 SIGNAL:U (Type and polarity of the output signal)

Command	Parameter	Unit	Group
SIGNAL_1:U X SIGNAL_2:U X	x= U+-10|I4-12-20| U-+10|I20-12-4	-	**OUTPUT**

This command is used to define the output signal (voltage or current) and to change the polarity[8].

Differential output ± 100 % corresponds with ± 10 V (0… 10 V at PIN 15 and PIN 16 or PIN 19 and PIN 20).
Current output ± 100 % corresponds with 4… 20 mA (PIN 15 to PIN 12 or PIN 19 to PIN 18). 12 mA (0 %) = center point of the valve.

An output current of << 4 mA indicates an error and the module is disabled. The current input of the proportional valves should be monitored by the valve. The valve have to be deactivated in case of < 4 mA input signal. Otherwise the EOUT command can be used to get a defined output signal.

[8] The older POL command is removed.

5.8 Drift compensation / high accurate positioning

The high accurate positioning or the drift compensation can be used if external influences limit the positioning accuracy. These function can be critical because limit cycling[9] could be caused by wrong parameterization.

Which positioning errors can be compensated[10]?

1. Zero point adjustment of the valve. By this kind of error a constant offset between command and feedback signal remains. This error is more or less constant.
2. Zero point deviation depending on the temperature. The same behavior as point 1, but the effect is increasing slowly (over the temperature).
3. Position error caused by an external force. All control and servo valves have a typical pressure gain characteristic. In case of external forces an output signal of 2…3 % has to be generated for the compensation of this force. And this signal is proportional to the positioning error. In opposite to point one and two the positioning error generated by forces can vary from cycle to cycle.

How does the drift compensation / high accurate positioning work?

The position errors should be compensated when the axis is near by the target position. The drift compensator generates a slowly changing output signal (integrating behavior) by which the a.m. errors can be eliminated.

To prevent instabilities, the integrator value will be frozen when the output value is lower than the deactivation limit (DC:DV).

Drift compensation (zero point adjustment)

By this function position errors described below point one and two are eliminated.

High accurate positioning (external force compensation)

To compensate positions errors as described below point three.

Control bits via fieldbus:

Through the fieldbus it is possible to activate drift compensation as well as high accurate positioning.

This can be accomplished by using the following control bits:

DC_ACTIVE: General activation of the drift compensation and high accurate positioning[11].

DC_FEEZE: Freezing of the static drift compensation value.

DC_F_POS: Activation of the high accurate positioning (dynamic drift compensation).

[9] The „limit cycling“ is a small and permanent oscillation around the target position. The main reason are static frictions and the hysteresis of the valve. By proper parameter setting, this can be avoided under the boundary condition that the desired accuracy is not achieved. In this case, the hydraulic system is the limiting factor in the accuracy.

[10] This is relevant for zero lapped control valves and servo valves.

[11] The static drift compensation to adjust the zero point and the freezing of this value should always be carried out at first. Only by this it is possible to avoid or minimise overshooting of the target position.

Typical setup

Valve pressure gain: 2,5 %; the activation point has to be set to 3… 5 % (DC:AV 300… 500).
Valve hysteresis: 0,5 %; the deactivation point has to be set to 0,7… 1,0 % (DC:DV 70… 100). The lower the value the better the accuracy.

DC:CR should be equal to DC:AV. Limiting the control range of the integrator is necessary to avoid long settlement durations.

The optimum integrator time has to be determined experimentally. Starting with higher values is recommended.

The integration time usually has to be determined by experiments. For this it is recommended to start with a long time (1500 ms) and to reduce it gradually. If overshooting or limit cycling occurs, the time setting has become too small.

5.8.1 DC:AV (Activation value)

5.8.2 DC:DV (Deactivation value)

5.8.3 DC:CR (Integrator limitation)

5.8.4 DC:I (Integration time)

Command	Parameter	Unit	Group
DC_1:AV X	x= 0… 2000	0.01 %	**EXTENDED**
DC_1:DV X	x= 0… 1000	0.01 %	
DC_1:CR X	x= 0… 500	0.01 %	
DC_1:I X	x= 0… 2000	ms	
DC_2:AV X	x= 0… 2000	0.01 %	
DC_2:DV X	x= 0… 1000	0.01 %	
DC_2:CR X	x= 0… 500	0.01 %	
DC_2:I X	x= 0… 2000	ms	

DC:AV This parameter is used to define the activation point (activation value). The DC function is completely deactivated in case of DC:AV = 0.

DC:DV This parameter is used to define the deactivation point (DV = deactivation value) Within the deactivation window no compensation value will be calculated (frozen state).
DC:AV = 0 should be used for best positioning, but „limit cycling“ can occur. This value should be set to 50 % of an acceptable error.

DC:CR The output range of the DC function will be limited (CR = control range) by this parameter.

DC:I This parameter is used to define the integrator time. The lower this value the faster the compensation. Low values will result in „limit cycling“.

5.9 Special commands

5.9.1 SELPLUS (additionally transmitted bus signals)

Command	Parameters	Unit	Group
SELPLUS:I X	I= 1|2 x= -|E1|U1|ES|E2|U2	-	**EXTENDED**

Bytes 20 - 23 of the output signals to the fieldbus can be freely connected to two of the internal process variables. These parameters are used to determine the assignment.
The following table gives an overview of the adjustable signals, their value ranges and scaling:

Signal	Description	Range	Unit
E1	Control deviation axis 1	+/- 30000	0.01 mm
U1	Control signal axis 1	+/- 10000	0.01 %
ES	Synchronisation error	+/- 30000	0.01 mm
E2	Control deviation axis 2	+/- 30000	0.01 mm
U2	Control signal axis 2	+/- 10000	0.01 %

5.9.2 ETC_LOOP (Transfer rate)

Command	Parameters	Unit	Group
ETC_LOOP X	x= NORMAL|FAST	-	**Terminal**

Only available when using EtherCAT devices!
In the default setting, the data is sent and received every 6 ms. The setting "FAST" shortens the data rate to 3 ms. Fieldbus parameterisation is not possible if this speed has been selected, as well as the second additional output value is then not transmitted.

5.9.3 DIAG (Query of the switch-off causes)

Command	Parameters	Unit	Group
DIAG DIAG2	-	-	**Terminal**

If you enter this command in the terminal window, a list of the last 10 shutdowns (no Ready if Enable is present) is displayed. However, the causes of the shutdown are not saved when the supply voltage is switched off. The last cause is displayed in the bottom line of the list. Entries "---" indicate unused memory cells.

5.9.1 NEGW (Release of negative position setpoints)

Command	Parameter	Unit	Group
NEGW X	x= ON|OFF	-	**TERMINAL**

The specification of negative position setpoints can be useful if you have set a negative sensor offset so that the actual position of the axis can actually fall below the zero point. In this way it is possible, for example, to move to the actual end stop via the profile generator and then readjust the offset.

5.9.2 AINMODE (Input scaling mode)

Command	Parameter	Unit	Group
AINMODE_1 X AINMODE_2 X	x= EASY|MATH	-	**TERMINAL**

This command is used to switch over the method of input scaling.

The AINMODE is used to define the kind of parameterizing of the analogue inputs. The EASY mode (DEFAULT) supports a simple and application oriented input scaling.

The MATH mode supports the free input scaling by a linear equation. This mode is compatible to our older modules.

Attention: This command can be executed in the terminal window only. In case of switching back, DEFAULT data should be reloaded.

5.9.3 AIN (Analogue input scaling)

Command	Parameters	Unit	Group
AIN_1:X AIN_2:X	a= -10000… 10000 b= -10000… 10000 c= -10000… 10000 x= V|C	- - 0,01 % -	**INPUT (MATH)**

This command offers an individual scalable input. The following linear equation is used for the scaling.

$$Output = A/B \cdot (Input - C)$$

The ***"C" value*** is the offset (e.g. to compensate the 4 mA in case of a 4… 20 mA input signal).
The variables ***A*** and ***B*** are defining the gain factor with which the signal range is scaled up to 100 % (e.g. 1.25 if using 4… 20mA input signal, defined in default current settings by A = 1250 and B = 1000). The internal shunt for the current measuring is activated with switching the ***X*** value.

The gain factor is calculated by setting the usable range (***A***) in relation to the real used range (***B***) of the input signal. Usable are 0… 20mA, means (***A***) has the value **20**. Really used are 4… 20mA, means (***B***) has a value of **16** (20-4). Not used are 0… 4mA. In a range of 20mA this is an offset of 20%, means a value of **2000** for (***C***). Last but not least (***X***) has to be set to **C** choosing current signal.

In this case AIN command would look like this:

AIN:I 20 16 2000 C or AIN:I 1250 1000 2000 C.

Typical settings:

Command	Input	Description
AIN_1:X 1000 1000 0 V	0… 10 V	Range: 0… 100 %
AIN_1:X 10 8 1000 V OR **AIN_1:X 1000 800 1000 V**	1… 9 V	Range: 0… 100 %; 1 V = 1000 used for the offset and gained by 10 / 8 (10 V divided by 8 V (9 V -1 V))
AIN_1:X 10 4 500 V OR **AIN_1:X 1000 400 500 V**	0,5… 4,5 V	Range: 0… 100 %; 0,5 V = 500 used for the offset and gained by 10 / 4 (10 V divided by 4 V (4,5 V -0,5 V))
AIN_1:X 20 16 2000 C OR **AIN_1:X 2000 1600 2000 C** OR **AIN_1:X 1250 1000 2000 C**	4… 20mA	Range: 0… 100 % The offset will be compensated on 20 % (4 mA) and the signal (16 mA = 20 mA – 4 mA) will be gained to 100 % (20 mA). Each of this parameterization for 4… 20 mA is setting the range to 0… 100 %.

5.10 PROCESS DATA (Monitoring)

Command	Parameters	Unit
WA1	External command position axis 1	mm
W1	Actual command position after ramp function axis 1	mm
X1	Feedback positon axis 1	mm
E1	Control deviation axis 1	mm
V1	Speed set point axis 1	%
U1	Control signal axis 1	%
ES	Synchronisation error	mm
WA2	External command position axis 2	mm
W2	Actual command position after ramp function axis 2	mm
X2	Feedback positon axis 2	mm
E2	Control error axis 2	mm
V2	Speed set point axis 2	%
U2	Control signal axis 2	%

The process data are the variables which can be continuously observed on the monitor or on the oscilloscope.

5.11 Status information

Each W.E.St. device with serial interface provides system and application oriented status information. If using the WPC those can be found realized as virtual LEDs in the monitor view. Green coloured are messages about the common readiness, yellow marked are defined states including being within the monitoring windows and the red ones are error messages. Moving the mouse marker on one of these LEDs a relating help text will be displayed. The following pictures show the view in the different version of the WPC software. As example the SSI sensor error is active in order to visualize the difference between active and inactive ones.

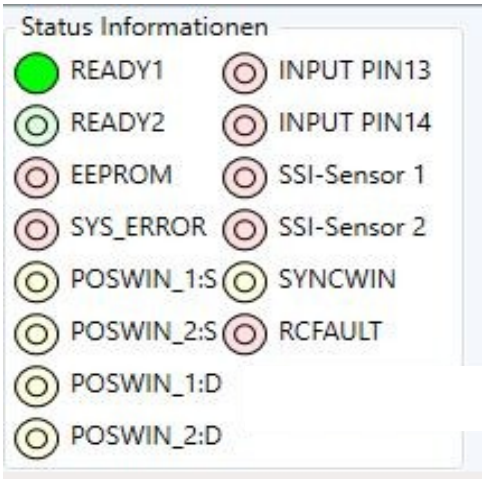

6 Common device functions

6.1 Failure monitoring

Following possible error sources are monitored continuously when SENS = ON/AUTO:

Source	Fault	Characteristic
Feedback signal PIN 13 4... 20 mA	Out of range or broken wire.	The output will be switched off.
Feedback signal PIN 14 4… 20 mA	Out of range or broken wire.	The output will be switched off.
SSI-sensor 1	Out of range or broken wire.	The output will be switched off.
SSI-sensor 1	Out of range or broken wire.	The output will be switched off.
EEPROM (at switching on)	Data error	The output is deactivated. The module can be activated by saving new parameters (pressing of the SAVE Button).

CAUTION: Take care of the EOUT command. Changes will influence the behaviour.

6.2 Troubleshooting

It is assumed that the device is in an operable state and there is communication between the module and the WPC-300. Furthermore, the valve control parameterization has been set with the assistance of the valve data sheets.

The monitor view in WPC can be used to analyse faults.

Attention: When using RC mode safety issues have to be considered. In this mode the module is directly controlled and the superimposed control of the system has no influence on it.

FAULT	CAUSE / SOLUTION
ENABLE is active, the module does not respond, and the READY LED is off.	There is presumably no power supply or the ENABLE signal is not present. If there is no power supply there is also no communication via our operating program. If a connection has been made to the WPC-300, then a power supply is also available If the power supply exists, an attempt should be made to see whether the system can be moved by means of the HAND+ and HAND- signals (measuring the output signal to the valve helps).

FAULT	CAUSE / SOLUTION
ENABLE is active, the READY LED is flashing.	The flashing READY LED signals that a fault is been detected by the module. The fault could be: • A broken cable or no signal at the input (PIN 14 or 13), if 4… 20 mA signals are parameterized. • Internal data error: press the command/SAVE button to delete the data error. The system reloads the DEFAULT data. With the WPC-300 operating program the fault can be localised directly via the monitor.
ENABLE is active; the READY LED is on, the system moves to an end position.	The control circuit polarity is incorrect. The polarity can be changed with the SIGNAL:U command or by reversing the connections to PIN 15 and PIN 16 or PIN 19 and PIN 20.
ENABLE is active, the READY LED is on, the STATUS LED is not flashing, the system moves to the target position but doesn't reach it (positioning error).	Serious positioning errors can result from incorrect parameterization or incorrect system design. • Is the cylinder position specified correctly? • Are the deceleration distances correct (to start the system the deceleration distances should be set to approx. 20… 25 % of the cylinder position[12])? • Is the valve a zero lapped control valve or a standard proportional valve? In the case of a proportional valve, the valve overlap which may be present should be compensated for with the MIN parameters. Typical values are to be found in the valve data sheet.
ENABLE is active, the READY LED is on, and the system oscillates on the spot.	The system is working and also actuating the valve. Various potential problems could be: • The parametrisation is not yet adjusted to the system (gain too high). • There is severe interference on the power supply. • Very long sensor cables (> 40 m) and sensor signal interference. • The MIN setting to compensate the valve overlap is too high. As a basic principle, the parametrisation of the sensor data and the controller settings must be carried out first (before switching on). An incorrect demand is equivalent to incorrect system design which then leads to incorrect operation. If the system oscillates, the gain should first be reduced (longer deceleration distances for D:A and D:B) and in the case of overlapped valves the MIN parameter should also be reduced.

Speed too low	The drive may be able to move to position but the speed is too low.
	• Check the control signal to the valve.
	  • Via the integrated oscilloscope (U variable).
	  • Measure the signal to the valve with an external oscilloscope / voltmeter.
	• If the control is within the range of ± 100% (± 10V), the fault must be sought in the hydraulics.
	• If the control signal is relatively low, the following points should be checked:
	  • Is the internal/external speed signal limiting the speed?
	  • Which setting has been specified for the deceleration distance in relation to the POSITION?

Speed too high	The drive should move to position. The drive moves in and out too fast leading to uncontrolled behaviour. Reducing the speed (VMAX parameter) has very little or no effect. • The hydraulic system is over-sized. The entire parameterization of the movement cycle cannot be reproduced (overlap and deceleration distance settings)

[12] The stability criterion of the hydraulic axes must be taken into account.

6.3 Remote control mode

This function allows the user controlling the device via the USB interface. When active the module is independent from the external demands. So we offer the possibility to put an axis into operation and test it without having the fieldbus available. Further this mode helps also when trouble shooting is necessary, because the plc or similar has not to be changed for trials. The WPC program therefor offers a simple user interface for giving those demands. Following pictures show examples of both versions of the software with this view. In version 3 a double click on the value to change is necessary before the slider can be moved or a value can be typed in. In version 4 the slider can be moved directly by holding the mouse button. Special feature at this device is the control of two axes in one device. Therefor at first the axis to control has to be selected. It is also possible to move both axes in synchronous run. This option corresponds to the activation of the SC bit via the fieldbus, means the once set demands are valid for both axes.

If the connection breaks down during the RC mode is active, the controller will be deactivated. An error message (RC fault) is generated and displayed even after re-establishing the connection. It can be quit like a standard error with the enable signal.

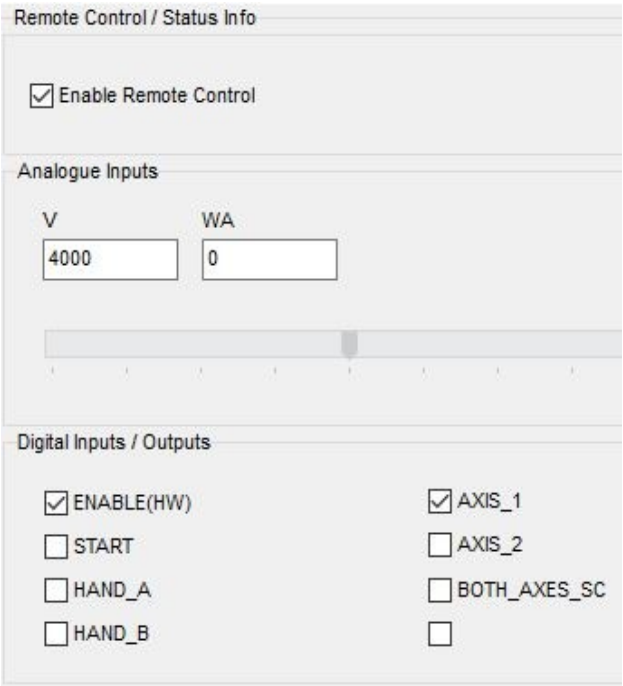

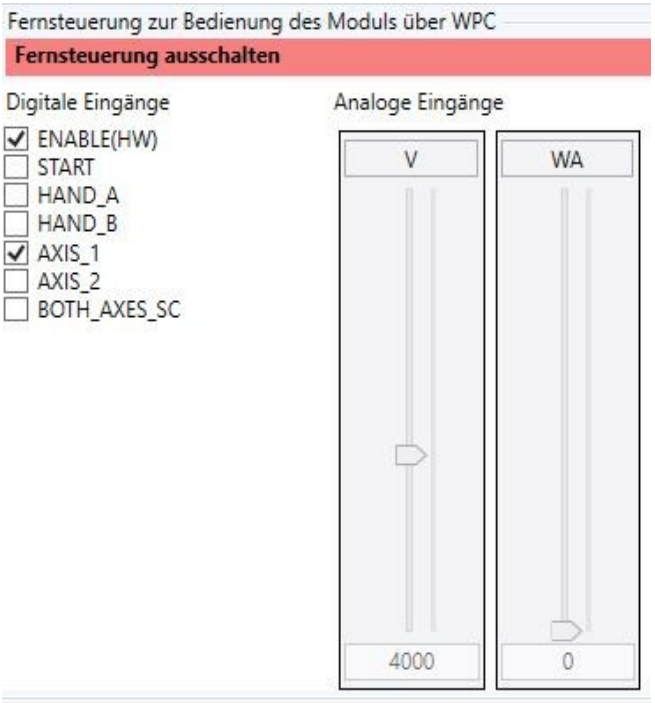

7 EtherCAT IO interface

7.1 ETHERCAT CoE

EtherCAT is an ethernet-based field bus system, developed by Beckhoff and the EtherCAT Technology Group (ETG). EtherCAT is an open technology standardized in the international standards IEC 61158 and IEC 61784 as well as in ISO 15745-4. EtherCAT can provide the same communication mechanisms as are known from CANopen: object directory, PDO (process data objects) and SDO (service object objects). Even network management is comparable. For example, EtherCAT can be implement on devices that were previously equipped with CANopen with minimal effort; large parts of the CANopen firmware are reusable. The objects can optionally be expand to take account of the larger bandwidth of EtherCAT.

In order to create a user-friendly interface for device operation, different organizations have created various standards in which the following are defined:

- The device classes that exist (e.g.: class ‘rotary encoder’, ‘analogue input module’).
- The parameters that each representative of such a class has (obligatory and optional elements).
- The place where these parameters are to be found and the mechanism with which they are to be changed.

EtherCAT follows the so called CoE standard here: Can-Application-protocol-over-EtherCAT.
The process data objects (PDO) are used for the fast and efficient exchange of real-time data (for example I / O data, setpoints or actual values). In the EtherCAT telegram, no objects are addressed but the contents of the process data are sent directly from previously mapped parameters.

7.2 EtherCAT installation

EtherCAT supports almost any topology, Line, tree or star. The bus or line structure known from the fieldbuses thus also becomes available for Ethernet. Particularly useful for system wiring is the combination of line and junctions or stubs. The required interfaces exist on the couplers; no additional switches are required. Naturally, the classic switch-based Ethernet star topology can also be used.
The permissible cable length between two EtherCAT devices must not exceed 100 meters. This results from the FastEthernet technology, which mainly for reasons of signal attenuation over the Line length allows a maximum link length of 5 + 90 + 5 m if lines with appropriate properties.
To connect EtherCAT devices, use only Ethernet (cable + plug) connections at least of category 5 (CAT5) according to EN 50173 or ISO / IEC 11801. EtherCAT uses four wires of the cable for signal transmission. EtherCAT uses RJ45 connectors, for example. The contact assignment is the Ethernet standard (ISO / IEC 8802-3) is compatible.

7.3 EtherCAT access handling

The input and output data of the EtherCAT slave are displayed as CANopen Process Data Objects (PDO). The process data (PDOs) cyclically transmitted by an EtherCAT slave are the user data. They are expected or sent to the slave in the application. For this purpose, the EtherCAT Master (Beckhoff TwinCAT) parameterizes each EtherCAT slave during the start-up phase. It specifies the process data (size in bits / bytes, source location, transmission type) from or to the slave would like.

With so-called "intelligent" EtherCAT devices, the process data information is also available in the CoE directory. However, any changes in this CoE directory which lead to deviating PDO settings prevent the slave from booting successfully. It is not recommended to configure other than the intended process data, since the device firmware (if available) is tuned to these PDO combinations.

Object list:

- Index objectindex PDO
- Subindex subindex PDO
- Name surname of PDO
- Flag RW read or write status of PDO
- Flag RO read only status of PDO, it is not possible to write data to the object
- Flag P an additional P characterizes the object as a process data object
- Value value of the object

7.4 EtherCAT device profiles (ESI)

The ‘ESI file (CoE directory) is provided by the manufacturer of an EtherCAT device.
It is created in the description language XML and has a standardized format for the description of devices.
The ESI file contains information about:

- Description of the file (name, version, creation date, etc.)
- General device information (manufacturer name and code)
- Device name and type, versions
- Description of the supported objects by their attributes

Localization in the EtherCAT Slave:

The CoE directory as a parameter system must be administrated in the device in the firmware (FW) in the local controller. This is the so-called online directory, because it is only available to the user if the EtherCAT slave is in operation with operating voltage supplied and, if applicable, can be manipulated via EtherCAT communication. So that the parameters can be viewed and changed in advance without the presence of a slave, a default copy of the entire directory is usually stored in the device description file ESI (XML). This is called the offline directory. Changes in this directory do not affect the later operation of the slave with TwinCAT.

The ESI description also defines the process image, the communication type between master and slave/device and the device functions, if applicable. The physical device (firmware, if available) has to support the communication queries/settings of the master. This is backward compatible, i.e. newer devices (higher revision) should be supported if the EtherCAT master addresses them as an older revision.

The ranges in the Slave CoE that are important for the application-oriented EtherCAT fieldbus user are

- 0x1000: This is where fixed identity information for the device is stored, including name, manufacturer, serial number etc., plus information about the current and available process data configurations.
- 0x8000: This is where the operational and functional parameters for all channels are stored, such as filter settings or output frequency. The following ranges are also of interest
- 0x4000: In some EtherCAT devices the channel parameters are stored here (as an alternative to the 0x8000 range).
- 0x6000: Input PDOs ("input" from the perspective of the EtherCAT master)
- 0x7000: Output PDOs ("output" from the perspective of the EtherCAT master)

This device series uses a universal gateway in which all data is transferred to the input PDO and output PDO area. The parameterization of individual parameters can also be done by this. This keeps the interfaces compatible with other fieldbus topologies.

7.5 Standard Objects

Index Subi.	Name	Description	Type	Flags	Default
1000	Device Type	Device type of the EtherCAT slave	UINT32	RO	0x00000000
1008	Manufacturer Device Name	Device name of the EtherCAT slave	STRING	RO	POS-124-U-ETC
1009	Hardware version	Hardware version of the EtherCAT slave	UINT16	RO	0x0014
100A	Software version	Software version of the EtherCAT slave	UINT16	RO	0x001e
1018:0	Identity	Information to identify the slave	UINT8	RO	0x04
1018:1	Vendor ID	Manufacturer ID of the EtherCAT slave	UINT32	RO	0x000005ae
1018:2	Poduct code	Product code of the EtherCAT slave	UINT32	RO	0x00000010
1018:3	Revision number	Revision number of the EtherCAT slave	UINT32	RO	0x00000001
1019:4	Serial number	Serial number of the EtherCAT slave	UINT32	RO	0x00000000

8 Profinet IO RT interface

8.1 PROFINET IO function

PROFINET is the standard for industrial ethernet based on IEEE 802.xx. PROFINET is based on the 100 Mb/s-version of full-duplex and switched Ethernet. PROFINET IO is designed for the fast data exchange between Ethernet-based controllers (master functionality) and field devices (slave functionality) with cycle times up to 10 ms.

CAUTION!
The module internal gateway must not be overloaded. If the communication load becomes too high, this gateway circuit might fail. The result is a temporary but complete failure of the control functionality until the module is powered off. In order to avoid overcharge, do not send new data faster than every 10 ms. This can be assured by calling the driver function in an appropriate cycle of the PLC.

8.2 Profinet Installation guideline

The Profinet IO field devices are connected exclusively via switches as network components. A Profinet IO network can be set up in star, tree, line or ring topology. Profinet IO is based on the Fast Ethernet standard transmission with 100 Mbit / s. The transmission media are copper cables CAT5.

For the IP20 environment in the control cabinet, the RJ45 connector CAT5 according to EN 50173 or ISO / IEC 11801 is used. The pin assignment is compatible with the Ethernet standard (ISO / IEC 8802-3).

The connection between Profinet participants is called Profinet channel. In most cases, Profinet channels are built with copper cables to IEC 61784-5-3 and IEC 24702. The maximum length of a Profinet channel, which is constructed with copper cables is 100 m.

8.3 PROFINET address assignment

All PROFINET IO slave devices need name and IP address to initiate communication.

Both are assigned to the device by the Profinet-IO-controller (PLC). The device name of the PROFINET IO device is stored in persistent memory in the device. It can be modified by a Profinet IO supervisor, e.g. the programming system of the belonging PLC.

Default address:

IP Address:	0.0.0.0
Subnet-Mask:	0.0.0.0
IP Address Gateway:	0.0.0.0

Address Example.:

IP Address:	192.168.1.111
Subnet-Mask:	255.255.255.0
IP Address Gateway:	192.168.1.111

8.4 Device data file (GSDML)

The characteristics of an IO device are described by the device manufacturer in a general station description (GSD) file. The language used for this purpose is the GSDML (GSD Markup Language) - an XML based language. For I/O data, the GSDML file describes the structure of the cyclic input and output data transferred between the programmable controller and the PROFINET IO device. Any mismatch between the size or structure of the input and output data and the actual internal device structure generates an alarm to the controller.

In the configuration of transmission data select 32 bytes for input and 32 bytes for output.

9 Profibus DP interface

9.1 Profibus function

The Profibus module supports all baud rates from 9,6 kbit/s up to 12000 kbit/s with auto detection of the baud rate. The functionality is defined in IEC 61158. The Profibus address can be programmed by a terminal program, WPC-300 or online via the Profibus. A diagnostic LED indicates the online status.

9.2 Installation guideline

A typical screened Profibus plug (D-Sub 9pol with switchable termination) is mandatory. Every Profibus segment must be provided with an active bus termination at the beginning and at the end. The termination is already integrated in all common Profibus plugs and can be activated by DIL switches. The bus determination needs a 5 Volt power supply for the correct function, which is supplied at PIN 6 of the D-sub-socket. The Profibus cable has to be screened at the determined contact clips in the Profibus plug.

9.3 Device data file (GSD)

The Profibus-DP features are documented in a device-data-file. Structure, content and code of this file (GSD) are standardized. They allow the configuring of any DP-slaves with configuration devices of several producers.

The GSD-data are read by a PROFIBUS-Master-configuration software and the correspondent settings are given to the master.

Enclosed is also the identification number of the Profibus node. It is necessary for a master without significant report overhead to identify the types of the connected devices.

The GSD-file **hms_1810** is available on our website next to the technical documentation of the product.

In the setting of the transfer bytes, 32 bytes (16 words consistent) are necessary as IN/OUT variables.

10 Process data

10.1 Data sent to the device

The demand PDO consists of the following 32 byte data frame:

Index ETC	Nr.	Byte	Function	Type	Range	Unit
7000:1	1	0	Control_1	UINT8		
7000:2	2	1	Control_2	UINT8		
7000:3	3	2	Control_3	UINT8		
7000:4	4	3	Control_4	UINT8		
7010:1	5	4	Position_1 High (MSB)	UINT32	0… 10000000	0,001 mm
	6	5	- - -			
	7	6	- - -			
	8	7	Position_1 Low (LSB)			
7010:2	9	8	Velocity_1 High	UINT16	0… 0x3fff (0… 100 %)	-
	10	9	Velocity_1 Low			
7020:1	11	10	Position_2 High (MSB)	UINT32	0… 10000000	0,001 mm
	12	11	- - -			
	13	12	- - -			
	14	13	Position_2 Low (LSB)			
7020:2	15	14	Velocity_2 High	UINT16	0… 0x3fff (0… 100 %)	-
	16	15	Velocity_2 Low			
7030:1	17	16				
…	18	17				
…	19	18				
…	20	19				
…	21	20				
…	22	21				
…	23	22				
…	24	23				
…	25	24				
7030:10	26	25				
7040:1	27	26	Parameter value High (MSB)	UINT32	value of a parameter to be changed via the bus	depending on the parameter
	28	27	- - -			
	29	28	- - -			
	30	29	Parameter value Low (LSB)			
7040:2	31	30	Parameter address High	UINT16		hex
	32	31	Parameter address Low			

10.1.1 Description of the bus signals

The module is controlled with two **control words** consisting of following bits:

Bit name	Description of the bit
ENABLE	General activation of the axis. Error messages are deleted and the output signal gets activated (in combination with the hardware enable). The actual position is taken over as command position for actively staying in position.
START	Start signal for positioning. The actual transmitted command value is taken over into the positioning controller and the output signal will be generated relating to the parameterization.
HAND:A	Manual mode. The axis is driven with the preset speed (parameter with the same name). This mode can only be used when ENABLE is available (even no READY is reported) and the START comand is not set.
HAND:B	Manual mode, see HAND:A. Two parameters and control bits are available for this mode for example in order to preparameterize different speed values for both directions.
DC_F-POS	Activation of fine positioning function (Extended functionality, please look at the chapter for this function).
DC_ACTIVE	General activation of the drift compensation / high accurate positioning function.
DC_FREEZE	Freezing of the static drift compensation value (Extended functionality, please look at the chapter for this function).
SC	Activation of the synchronous controller. In synchronous run the preset values for axis 2 are not active. The system is driven by the demand values of axis 1. Control bits, command position and speed as well as control mode are synchronized. Only enable has to be set for both axes separately.
DIRECT	In direct mode new command positions are taken over directly from the controller while START signal is available. In normal mode the START signal has to be reset and set again for getting a new command position into the controller. Speed values are always updated directly.
LIVEBIT	The fieldbus communication can be monitored with the Livebit functionality. If this bit is set to "TRUE", an internal monitoring function is activated. After a single triggering of this control bit, a permanent change of the value must take place. It is monitored cyclically that this input value is changed at least once per second by the fieldbus. After expiration of this time without data change the READY state of the module is exited (does not apply to EtherCAT devices). The state of the bit is continuously reported back via LIVEBIT OUT. Through this the superior control can also monitor the communication. Resetting this error is possible by resetting all enable bits. Then the function is deactivated by default.
PARA READ	Reading out the selected (parameter) address when activated. The value of the selecte parameter is returned in PARA VALUE of the status. If the address is not valid the function will return „0xffffffff“.
PARA VALID	Transmitting new parameter settings when activated.
PARA MODE	Enables parameterizing via fieldbus (Procedure is described in the following chapter)

Setting the bit (signal 1) activates the relating function.

Further demands like **command position, speed a**nd p**arameterizing**.

Byte notation	Description of the byte
(COMMAND) POSITION	With the resolution of 1 µm the position which will be driven to after setting START is preset.
(COMMAND) VELOCITY	Sets the maximum possible speed of the axis in SDD mode. 3FFF allows 100%, if the parameterization allows it. This limitation is also responcible for the manual mode. If the demand here is lower, the parameterized hand value will not be reached. In NC mode the value which is preset here is the speed demand for the profle generator.
(PARAMETER) VALUE	New value for a parameter which should be changed via the fieldbus. Resolution and value range depend on the relating parameter.
(PARAMETER) ADDRESS	Here the address of the parameter to change is transmitted. Available parameters and their addresses can be found in the table of the following chapter with the functional description.

Positioning resolution of 1 µm (independent from the real sensor resolution), max. 0x989680 (10.000.000) is used. The command position is limited by the parameter SYSRANGE.

The command speed is interpreted in percentage of the programmed speed or of the output signal. The value of 0x3fff corresponds with 100 % speed.

10.1.2 Coding of the control bits

Description of control 1 (axis 1)

Nr.	Bit	Name	Description	Type	Default
1	0	-	-	BOOL	0
2	1	DC_FREEZE_1	Storing of the drift compensation offset axis 1	BOOL	0
3	2	DC_ACTIVE_1	General activation of the extended functionality axis 1	BOOL	0
4	3	DC_F-POS_1	Fine positioning function axis1	BOOL	0
5	4	HAND_B_1	Manual mode value B axis 1	BOOL	0
6	5	HAND_A_1	Manual mode value A axis 1	BOOL	0
7	6	START_1	Start signal for positioning axis 1	BOOL	0
8	7	ENABLE_1	General activation of the axis 1	BOOL	0

Description of the Control_2 (axis 2)

Nr.	Bit	Name	Description	Type	Default
1	0	-	-	BOOL	0
2	1	DC_FREEZE_2	Storing of the drift compensation offset axis 2	BOOL	0
3	2	DC_ACTIVE_2	General activation of the extended functionality axis 2	BOOL	0
4	3	DC_F-POS_2	Fine positioning function axis2	BOOL	0
5	4	HAND_B_2	Manual mode value B axis 2	BOOL	0
6	5	HAND_A_2	Manual mode value A axis 2	BOOL	0
7	6	START_2	Start signal for positioning axis 2	BOOL	0
8	7	ENABLE_2	General activation of the axis 2	BOOL	0

Setting the bit (signal 1) activates the relating function.

Description of the Control_3 (device)

Nr.	Bit	Name	Description	Type	Default
1	0	LIVEBIT	Communication monitoring	BOOL	0
2	1	-	-	BOOL	0
3	2	-	-	BOOL	0
4	3	-	-	BOOL	0
5	4	-	-	BOOL	0
6	5	-	-	BOOL	0
7	6	SC	Synchronous control	BOOL	0
8	7	DIRECT	Direct mode for new command positions	BOOL	0

Description of the Control_4 (parameterizing)

Nr.	Bit	Name	Description	Type	Default
1	0	-	-	BOOL	0
2	1	-	-	BOOL	0
3	2	-	-	BOOL	0
4	3	-	-	BOOL	0
5	4	-	-	BOOL	0
6	5	PARAREAD	Reading out the selected address	BOOL	0
7	6	PARAVALID	Transmitting a new parameter setting	BOOL	0
8	7	PARAMODE	Enables parameterizing via fieldbus	BOOL	0

Setting the bit (signal 1) activates the relating function.

10.2 Data sent to Fieldbus

The status PDO consists of the following 32 byte data frame:

Index ETC	Nr.	Byte	Function	Type	Range	Unit
6000:1	1	0	Status_1	UINT8		
6000:2	2	1	Status_2	UINT8		
6000:3	3	2	Status_3	UINT8		
6000:4	4	3	Status_4	UINT8		
6010:1	5	4	Actual_Position_1 High (MSB)	UINT32	0… 10000000	0,001 mm
	6	5	- - -			
	7	6	- - -			
	8	7	Actual_Position_1 Low (LSB)			
6010:2	9	8	Internal command position 1 High (MSB)	UINT32	0… 10000000	0,001 mm
	10	9	- - -			
	11	10	- - -			
	12	11	Internal command position 1 Low (LSB)			
6020:1	13	12	Actual_Position_2 High (MSB)	UINT32	0… 10000000	0,001 mm
	14	13	- - -			
	15	14	- - -			
	16	15	Actual_Position_2 Low (LSB)			
6020:2	17	16	Internal command position 2 High (MSB)	UINT32	0… 10000000	0,001 mm
	18	17	- - -			
	19	18	- - -			
	20	19	Internal command position 2 Low (LSB)			
6030:1	21	20	Additional output value 1 (MSB)	INT16	See Command Table in 5.9.1	
	22	21	Additional output value 1 (LSB)			
6030:2	23	22	Additional output value 2 (MSB)	INT16	See Command Table in 5.9.1	
	24	23	Additional output value 2 (LSB)			
…	25	24				
…	26	25				
…	27	26				
…	28	27				
6040:1	29	28	Parameter value High (MSB)	UINT32	Value range of respective parameter	Parameter dependent
	30	29	- - -			
	31	30	- - -			
	32	31	Parameter value Low (LSB)			

10.2.1 Description of the bus signals

Report from the controller via the fieldbus happens by two **status words** with the following bits:

Bit name	Description of the bit
READY	General operational readiness of the axis. ENABLE signals are available and no error was detected. The module is active.
POSWIN:S	Static position monitoring. Message for reaching the target position within the preset tolerance.
POSWIN:D	Dynamic position monitoring. Message for being within the preset window for the following error, relevant in NC mode.
SYNCWIN	Synchronous run monitoring. Message for being within the preset window for the synchronous error. Only active when synchronous controller is active.
$\overline{\text{D-ERROR}}$	Internal data error. Try to save the parameterset to reactivate the module.
$\overline{\text{SENS-ERROR}}$	Sensor error. SSI or 4… 20mA input signals can be monitores.
PARA ACTIVE	Parameterization via fieldbus is active (feedback PARA MODE).
PARA READY	Confirmation for transferring new parameter value to the module successfully (validation of the PARA VALID command).
LIVEBIT OUT	Reporting the demand for the monitoring function (see description control livebit)

A set bit (signal 1) signalizes the relative message.

Attention: Error signals are inverted, an error exists if the bit is **not** set.

Further status signals like **internal command position, actual position a**nd **parameter values.**

Byte notation	Description of the byte
(ACTUAL) POSITION	Monitoring of the actual position of the axis, reported in µm units.
(INTERNAL) COMMAND POSITION	The internal command position can be evaluated here, means the actual relevant value for the controller which can vary depending on adaptions and profile generator.
(PARAMETER) VALUE	The actual existent value of the relating parameter is displayed here when the PARA READ function was activated.

10.2.2 Coding of the status bits

Description of the status byte 1 (axis 1)

Nr.	Bit	Name	Description	Type	Default
1	0	$\overline{\text{SENSERROR_1}}$	Sensor error axis 1	BOOL	0
2	1	-	-	BOOL	0
3	2	-	-	BOOL	0
4	3	-	-	BOOL	0
5	4	SYNCWIN	Synchronous error within the window	BOOL	0
6	5	POSWIN_1:D	Following error within the window axis 1	BOOL	0
7	6	POSWIN_1:S	Reaching target position with set accuracy axis 1	BOOL	0
8	7	READY_1	General operational readiness of axis 1	BOOL	0

Description of the status byte 2 (axis 2)

Nr.	Bit	Name	Description	Type	Default
1	0	$\overline{\text{SENSERROR_2}}$	Sensor error axis 2	BOOL	0
2	1	-	-	BOOL	0
3	2	-	-	BOOL	0
4	3	-	-	BOOL	0
5	4	-	-	BOOL	0
6	5	POSWIN_2:D	Following error within the window axis 2	BOOL	0
7	6	POSWIN_2:S	Reaching target position with set accuracy axis 2	BOOL	0
8	7	READY_2	General operational readiness of axis 2	BOOL	0

A set bit (signal 1) signalizes the relative message.

Attention: Error signals are inverted, an error exists if the bit is **not** set.

Description of the status byte 3 (error messages)

Nr.	Bit	Name	Description	Type	Default
1	0	-	-	BOOL	0
2	1	-	-	BOOL	0
3	2	-	-	BOOL	0
4	3	-	-	BOOL	0
5	4	-	-	BOOL	0
6	5	$\overline{\text{BUFFER_OF}}$	BufferOverflow data overflow, only **Profinet**	BOOL	0
7	6	$\overline{\text{CHK_ERROR}}$	Error in the checksum of the **EtherCAT** or **Profinet** data transfer.	BOOL	0
8	7	$\overline{\text{D_ERROR}}$	Internal data error.	BOOL	0

Fieldbus specific status messages, only available in the relating device type.

Description of the status byte 4 (parameterizing)

Nr.	Bit	Name	Description	Type	Default
1	0	LIVEBIT_OUT	Feedback (= LIFEBIT), monitoring of communication	BOOL	0
2	1	-		BOOL	0
3	2	-		BOOL	0
4	3	-		BOOL	0
5	4	-		BOOL	0
6	5	-		BOOL	0
7	6	PARA_READY	Parameter has been taken over	BOOL	0
8	7	PARA_ACTIVE	Bus parameterization	BOOL	0

A set bit (signal 1) signalizes the relative message.

Attention: Error signals are inverted, an error exists if the bit is **not** set.

11 Parameterizing via Fieldbus

11.1 Procedure

Preparation:

- Power supply of the different sections has to be available.
- For safety issues the system should not be active.
  If active, the ENABLE bit in the control word has to be reset.
  Attention: Parameterization via fieldbus can also be done having an active system. In this case it should be done very carefully because changes are directly operative.

Parameterization:

- At first the **PARA MODE** bit has to be set to enable parameterizing via Profinet.
  This will be reported via the **PARA ACTIVE** bit.
- Pretend **address** and new **value** of the parameter which should be changed.
- Setting the **PARA VALID** bit to high will transmit the data.
  The **PARA READY** bit will report a successful parameterization.
  Attention: A missing **para ready** bit means parameterization was not done.

Storing:

- Same procedure as parameterizing standard parameters.
- Selecting **2100** as **address**, written **value** does not matter (below 60000).

Password protection:

- If a password was set this has to be entered first for enabling parameterization. Procedure is the same as when parameterizing standard parameters.
- Select **2200** as **address** and send the password (PASSFB) as **value**.
- After **PARA READY** reports success, subsequently parameterizing can be done as long as **PARA MODE** stays active. After resetting it password has to be renewed when it gets activated again.
  Attention: Even with active **PARA MODE** mode the device stays ready for operation.

➡ If the password was transferred incorrect three times, the parameterization mode gets locked (reported by deactivated **PARA ACTIVE** bit). Only restarting the device enables three new attempts for enabling.

➡ Please note that a storage of the parameterization via the Profinet is limited in the number of writing cycles. Means it should be done only when necessary.

11.2 Parameter List

The following table shows the parameters which can be adjusted via the fieldbus and their addresses:

Nr.	Address	Parameter	Comment
1	0x2001	POSWIN_1:S	
2	0x2002	POSWIN_1:D	
3	0x2003	ACCEL_1	
4	0x2004	V0_1:A	
5	0x2005	V0_1:B	
6	0x2006	VRAMP_1	
7	0x2007	A_1:A	
8	0x2008	A_1:B	
9	0x2009	D_1:A	
10	0x2010	D_1:B	
11	0x2011	PT1_1	
12	0x2012	CTRL_1	1 = LIN, 2 = SQRT, 3 = SQRT2
13	0x2013	MIN_1:A	
14	0x2014	MIN_1:B	
15	0x2015	TRIGGER_1	
16	0x2016	OFFSET_1	
17	0x2017	OFFSET_1:X	
18	0x2018	SETZERO:1[13]	for automatic adjustment
19	0x2021	POSWIN_2:S	
20	0x2022	POSWIN_2:D	
21	0x2023	ACCEL_2	
22	0x2024	V0_2:A	
23	0x2025	V0_2:B	
24	0x2026	VRAMP_2	
25	0x2027	A_2:A	
26	0x2028	A_2:B	
27	0x2029	D_2:A	
28	0x2030	D_2:B	
29	0x2031	PT1_2	
30	0x2032	CTRL_2	1 = LIN, 2 = SQRT, 3 = SQRT2
31	0x2033	MIN_2:A	
32	0x2034	MIN_2:B	
33	0x2035	TRIGGER_2	
34	0x2036	OFFSET_2	
35	0x2037	OFFSET_2:X	
36	0x2038	SETZERO:2[13]	for automatic adjustment
37	0x2041	SYNCWIN	
38	0x2042	SYNC:P	
39	0x2043	SYNC:V0	
40	0x2044	SYNC:T1	
41	0x2100	SAVE	Save the parameter table
42	0x2200	PW	Input password PASSFB

[13] To automatically adjust the offset, write on this parameter via the field bus a value >0. Precondition is that the corresponding channel is in the "READY" state and that both the corresponding start bit and the synchronisation controller are not activated. OFFSET:X is then set so that the current position of the axis corresponds to 0.0 mm.

12 Profinet – Driver Blocks for Simatic – Controllers

12.1 TIA – Portal

For use within the „TIA Portal“ software we provide two driver blocks that enable a convenient access out of the application program:

a) The source WEST_POS124U_PFN.scl for controllers of the S7-1200 and -1500 series
b) The source WEST_POS124U_PFN_TIA_KLASSIK.scl for controllers of the S7-300 and -400 series

Below their integration in the TIA project and the interconnections are explained.

1.) Import the GSDML – file
2.) Project the connection between PLC and controller card via Profinet:

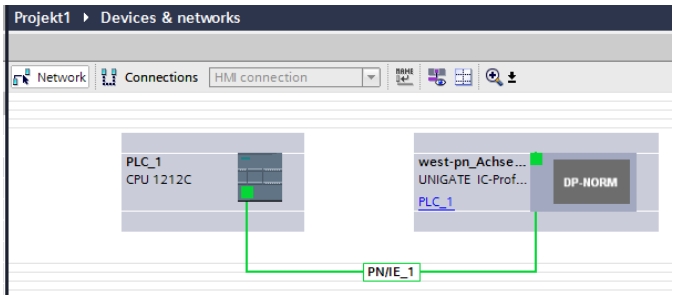

3.) Assemble a module „IN/OUT 32 bytes“:

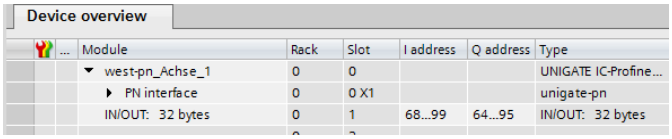

The addresses will be assigned automatically. Important for the link of the program block is the hardware identifier, which is also assigned automatically. This only applies if a S7-1200 / -1500 controller is used.

To determine the identifier right – click in the project tree on the device, choose “properties” and take over the number which is displayed in the tab “System constants”:

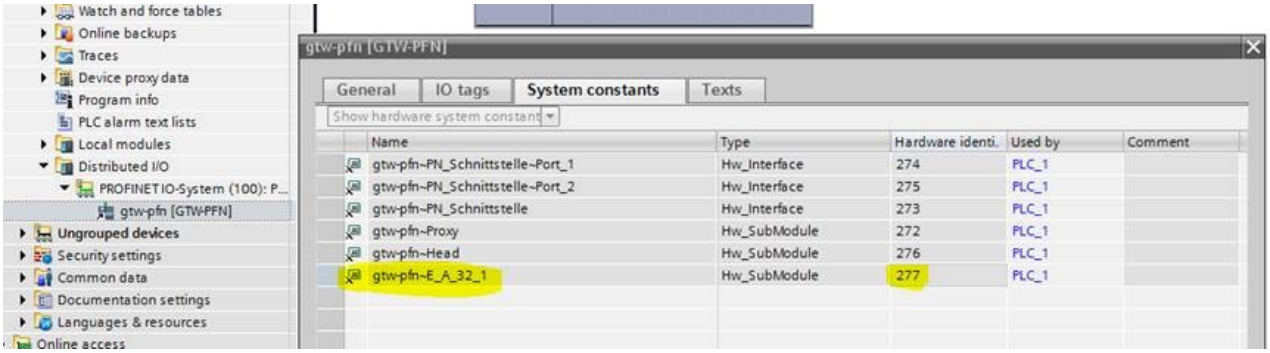

If a controller of the S7-300 and -400 series is used, the input and output addresses of the I/O – Module are the required information for the driver block, see over.

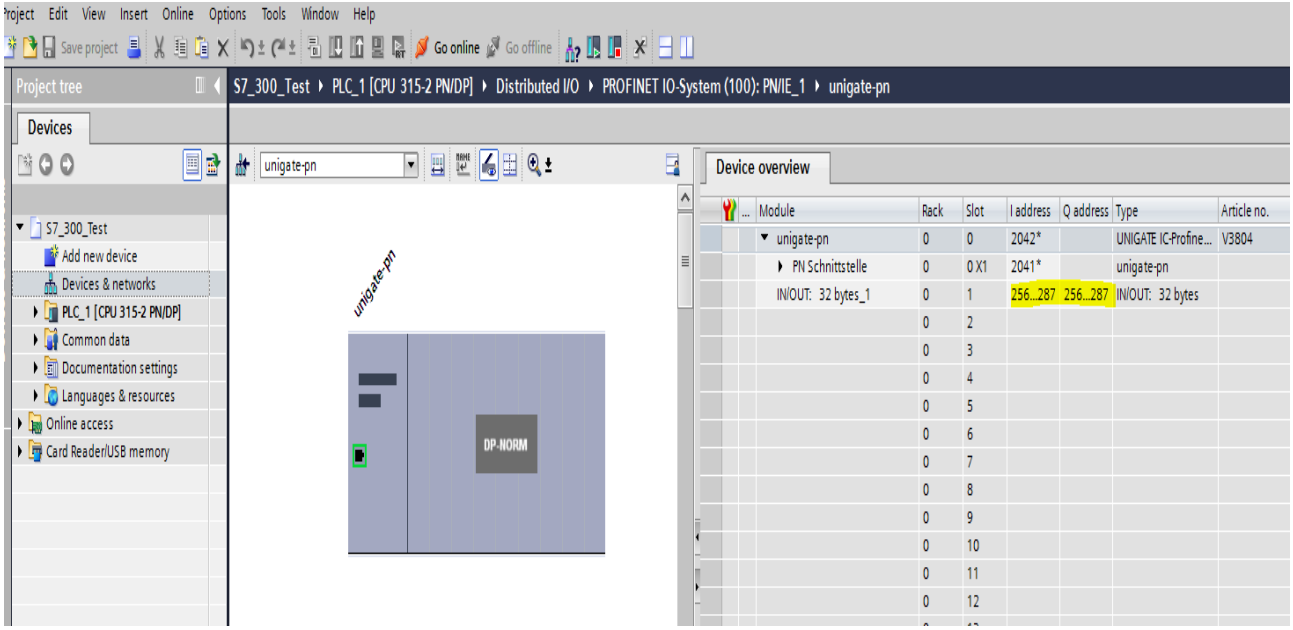

4.) The driver block is supplied as SCL – source. In order to assemble it into the project, the file has to be added to the TIA – Portal as “new external file”:

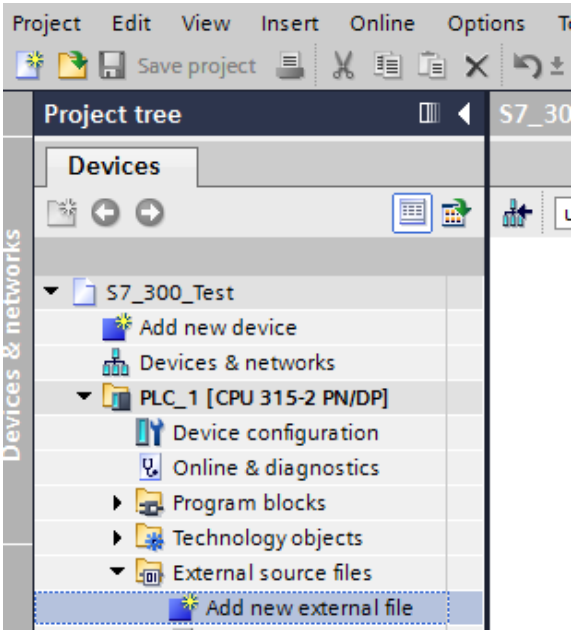

5.) Subsequently click on the imported file and chose “generate blocks from source”. After this step the driver block can be found in the “blocks” folder. Its number may differ.

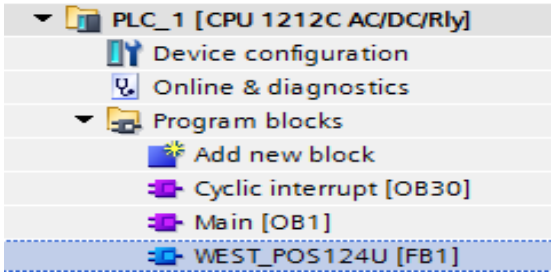

This FB can now be called out of the application program. This must happen in a cyclic interrupt with an execution time >= 20 ms in order to avoid overloading the module internal gateway.

View of the block in FUP w/o interconnection:

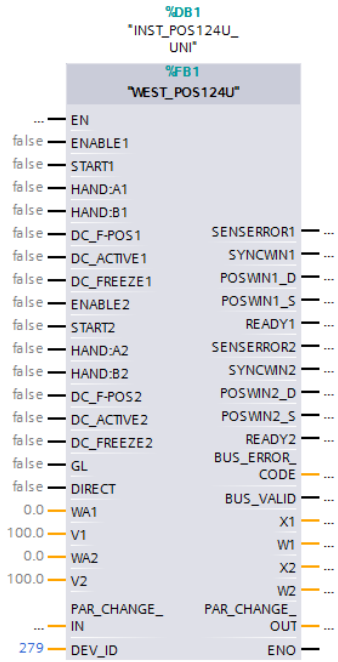

Address designation for S7-300 / -400 (example):

12.2 STEP7 – classic

If controllers of the S7-300/-400 series are used, their programming can alternatively be done using the “Simatic Manager”.

First the GSDML – file has to be imported in the HW – configurator.

Then create a Profinet – system and choose the component „UNIGATE IC-Profinet 2Port“ from the catalogue folder “PROFINET IO / Additional Field Devices” and add it to the Profinet-IO-System.

Then you can open up the device in the right window and take the element „IN/OUT: 32 bytes“ from the “bidirectional” subfolder and place it in the slot 1 of the device (window left / bottom).

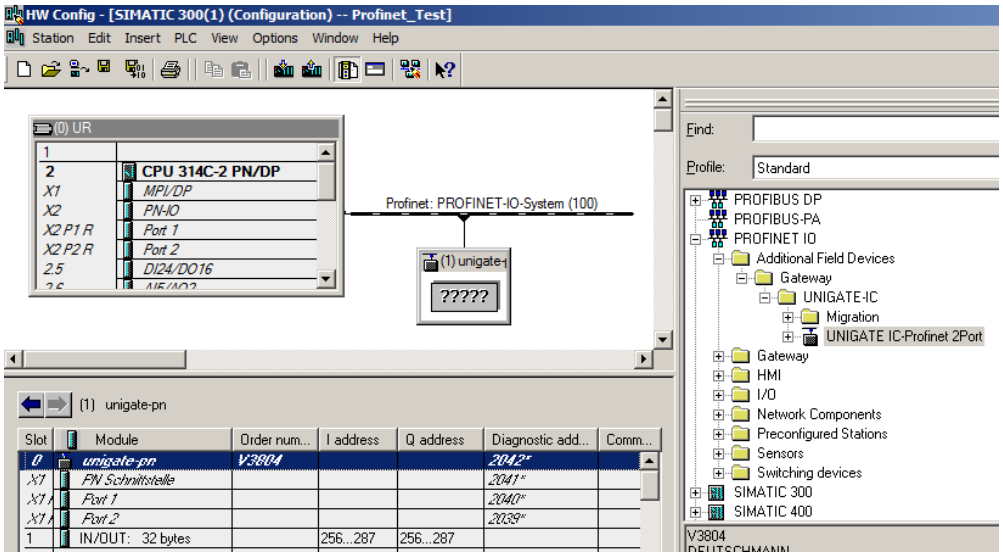

The system will automatically assign addresses (I address / Q address).

These may be altered if required. The start addresses of both ranges need to be kept in mind because they have to be entered as fix input parameters for the driver block.

As driver we supply a STL source (*.awl) which can be imported into the “Sources” folder:

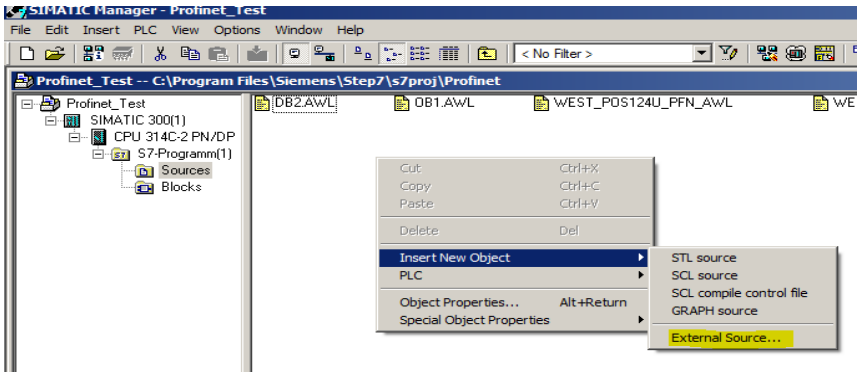

The source contains a symbolic name for the blocks which corresponds to the file name, here it is „WEST_POS124U_PFN“.

Prior to compiling them, a free block number has to be allotted to the name in the Symbol Editor:

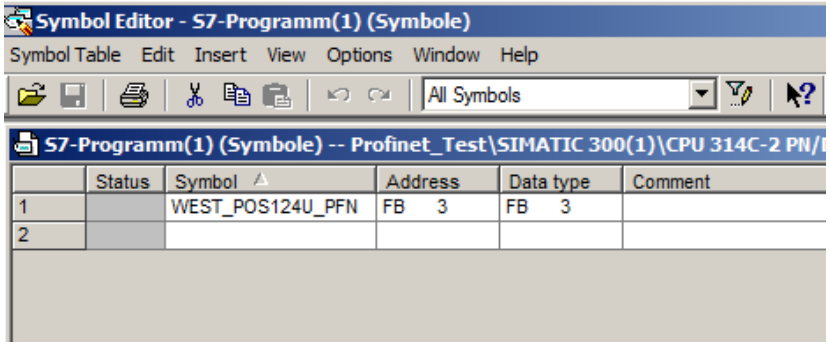

After saving the symbol list, the FB can be created by right button click on the source and choosing “Compile”:

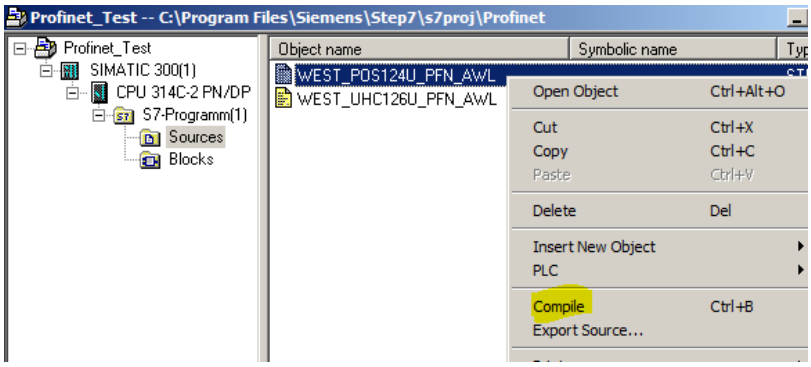

The translation should terminate successfully and the block folder will then contain the new FB. This FB can now be called out of the application program. This must happen in a cyclic interrupt with an execution time >= 20 ms in order to avoid overloading the module internal gateway.

A view of the block in FUP w/o interconnection

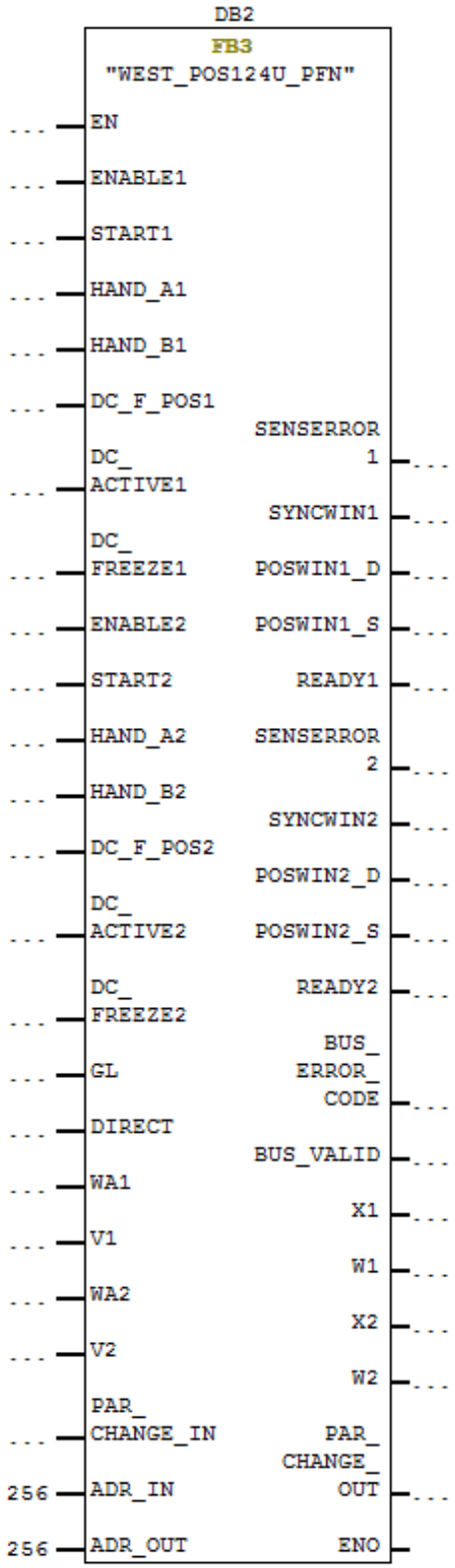

12.3 Common Properties

The connectors of the driver block correspond as far as possible to the description in the previous chapter. The following differences have to be considered:

- Transduction of setpoint positions in the number format “real” and unit [mm]
- Transduction of the speed setpoint in the number format “real” and [%] related to the parameterized value.
- The signals allowing to change parameters are bundled in structures (usage is optional).
- As parameter „DEV_ID“ the hardware identifier of the IO Module has to be entered (TIA)
- As parameters ADR_IN / ADR_OUT the starting addresses (see HW config.) have to be entered (Step 7 classic).
- The values „SENSEERROR1/2“ are not inverted, which mean “TRUE” indicates the presence of an error.
- The bit “BUS_VALID” signals the operation of the bus data transfer.
- If needed, the output „BUS_ERROR_CODR“ yields detailed diagnostic information

BUS ERROR CODE		
Nr.	**Bit**	**Funktion**
1	0	Internal data error (DERROR)
2	1	Checksum error Profinet (CHKERROR)
3	2	Data overflow error Profinet (BUFFEROV)
4	3	Receiving error (access to the input addresses, module -> PLC)
5	4	Transmitting error (access to the output addresses, PLC -> module)
6	5	No data exchange (Watchdog)
7	6	
8	7	

- Feedback of the actual positions and internal setpoints in the number format “real” and unit [mm]

If the bus data exchange is faulty, the feed back values are not reliable. In most cases they will be frozen in that case. If the output values are processed and used to control further functions, the valid bit has also to be considered. In case of a bus failure adequate fall-back values have to be used so that the complete system is kept in a safe state.

Application example:

On the following page an example with minimum usage of the signals is shown, basis is a positioning of two independent axes. No manual commands are used and the control should be permanently active. Drift compensation and fine positioning are no used in this case.

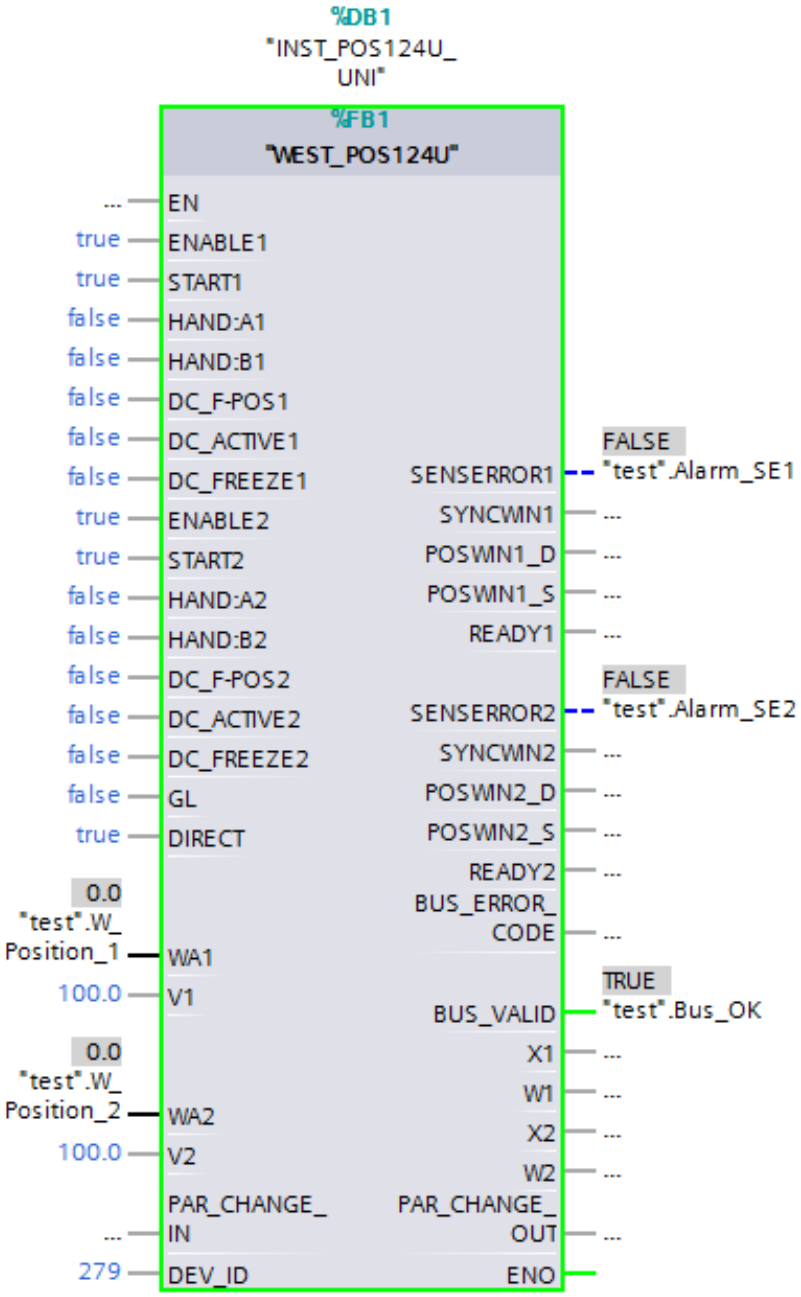
%DB1
"INST_POS124U_
UNI"
%FB1
"WEST_POS124U"
...
EN
true
ENABLE1
true
START1
false
HAND:A1
false
HAND:B1
false
DC_F-POS1
false
DC_ACTIVE1
false
DC_FREEZE1
true
ENABLE2
true
START2
false
HAND:A2
false
HAND:B2
false
DC_F-POS2
false
DC_ACTIVE2
false
DC_FREEZE2
false
GL
true
DIRECT
0.0
"test".W_
Position_1
WA1
100.0
V1
0.0
"test".W_
Position_2
WA2
100.0
V2
PAR_CHANGE_
IN
...
279
DEV_ID
SENSERROR1
FALSE
"test".Alarm_SE1
SYNCWIN1
POSWIN1_D
POSWIN1_S
READY1
SENSERROR2
FALSE
"test".Alarm_SE2
SYNCWIN2
POSWIN2_D
POSWIN2_S
READY2
BUS_ERROR_
CODE
BUS_VALID
TRUE
"test".Bus_OK
X1
W1
X2
W2
PAR_CHANGE_
OUT
ENO

13 Notes