VATIS

Tivar Lining

Oplossingen tegen slijtage en aanplakken

Oplossingen tegen slijtage en aanplakken

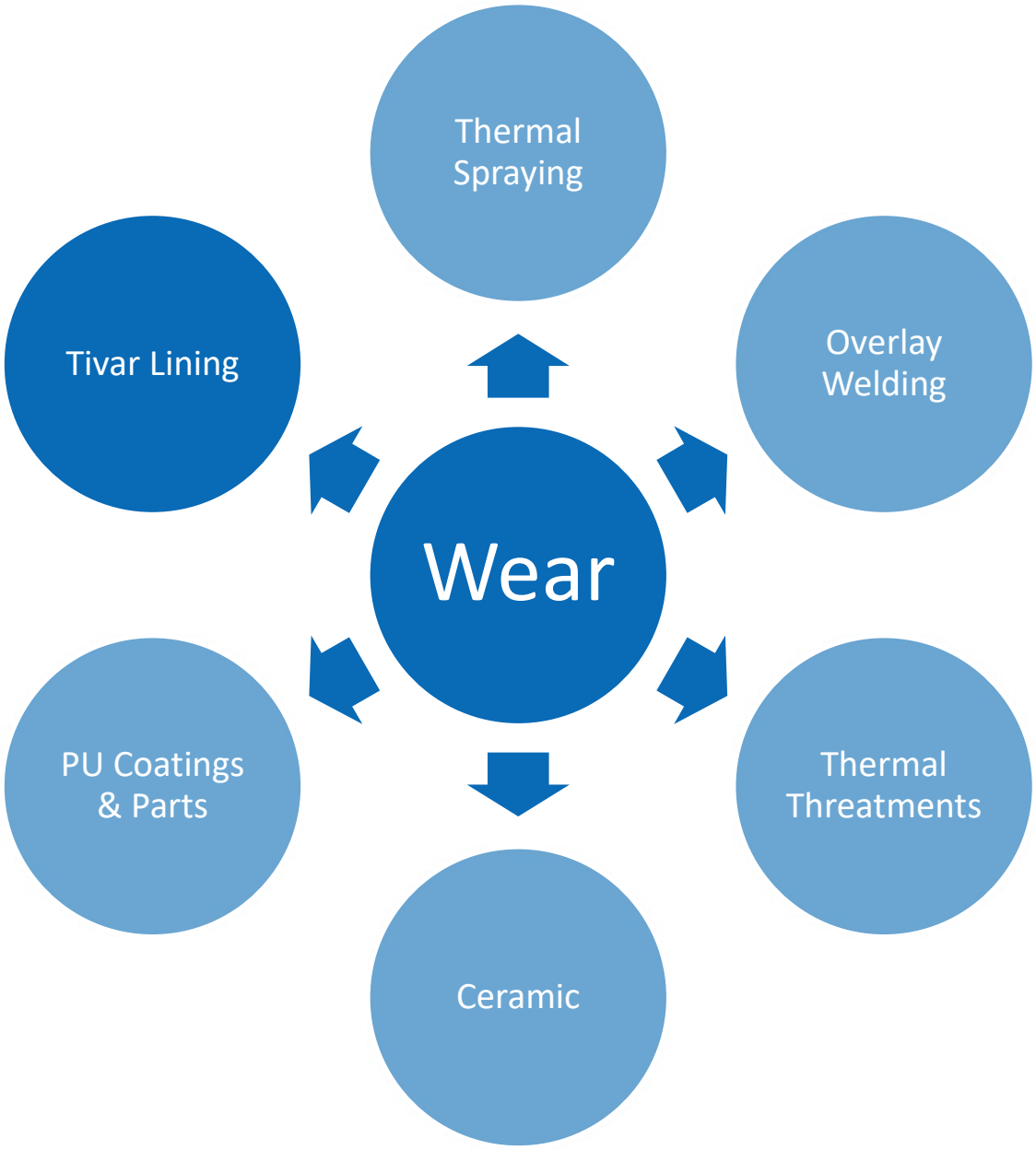

LB1

VATIS

Tivar Lining - Optimised lining material

- Tivar Lining: Optimized UHMW-PE

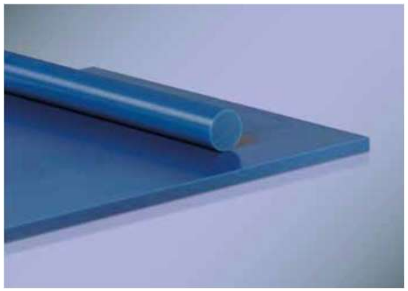

- TIVAR® is a dark blue material on polymer basis which has been optimized for the use as a lining material. Due to its outstanding properties (low coefficient of friction and excellent wear resistance), TIVAR® 88 is the preferred material for the lining of storage and transport containers.

- Key Benefits at a Glance:
  - Very low coefficient of friction
  - Very high wear resistance, optimized for the
  - requirements in lining applications
  - High impact strength
  - Very good resistance to aggressive chemicals
  - Temperature range from -200°C up to +80°C
  - Water repellent
  - Anti-static and UV-stabilized quality available
  - upon request

- Product Availability:
  - Sheets in standard dimensions 3050 x 1220 mm
  - Sheet thicknesses from
  - 8 to 30 mm

Dia 43

LB1 Luc Belis; 21-4-2019

LB1

VATIS

Tivar Lining - Optimised lining material

- Applications: Liner for optimized bulk product flow
  - Bridging/ Arching and Funnel flow:

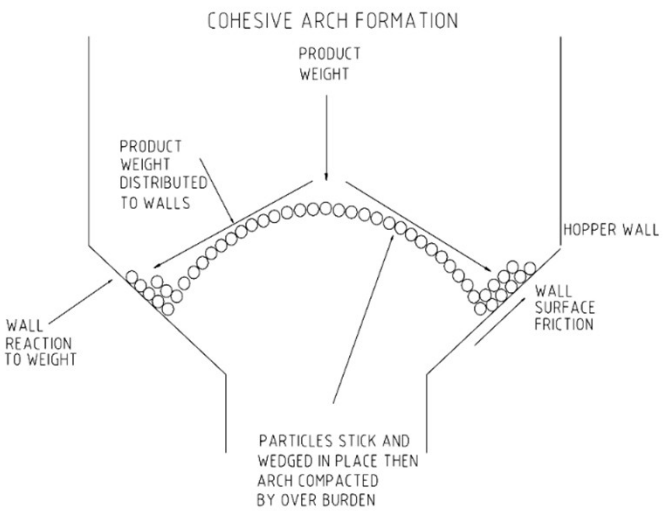

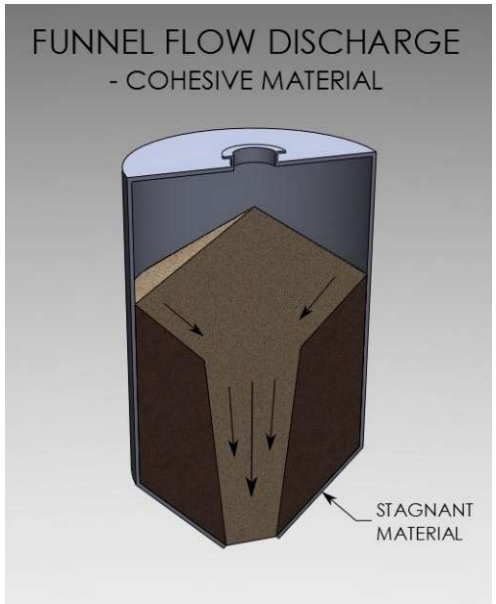

  - Anti-stick liner for hoppers, gutters, conveyer systems…

Dia 44

LB1 Luc Belis; 21-4-2019

LB1

VATIS

Tivar Lining - Optimised lining material

- Silos: Lining pre-machined plates and T-profiles and/or drop-in liners

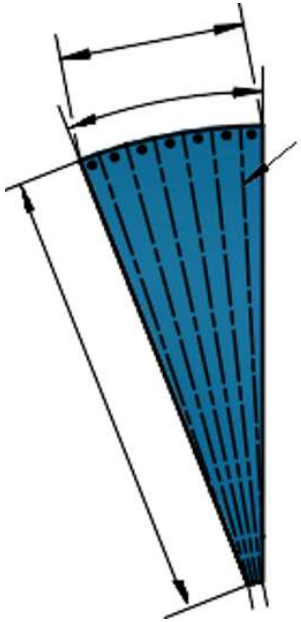

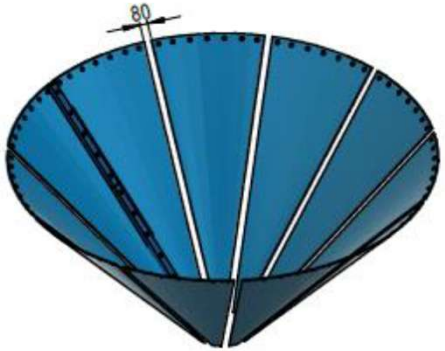

Dia 45

LB1 Luc Belis; 21-4-2019

LB1

VATIS

Tivar Lining - Optimised lining material

- Silos

Cylindric to conical

Square to conical round outle

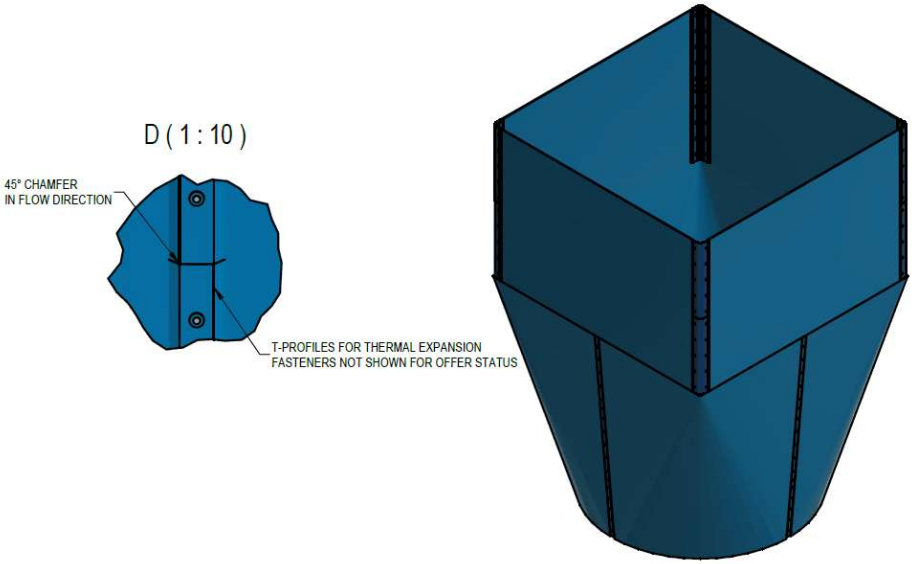

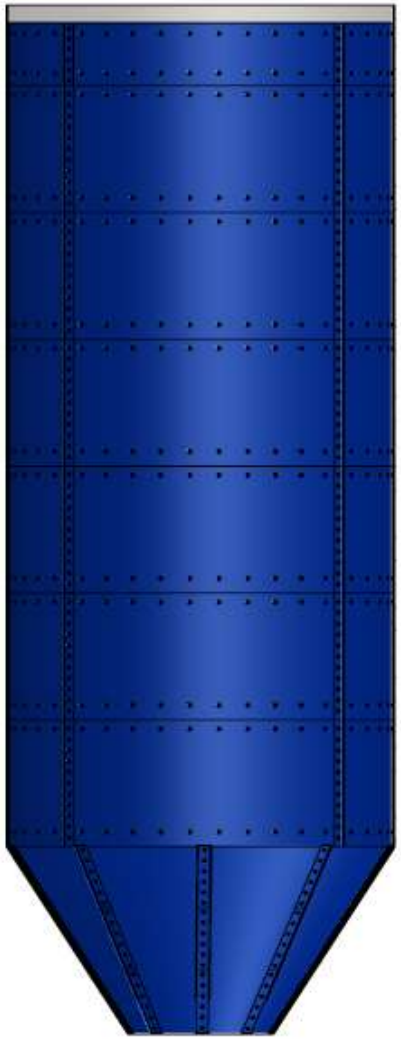

Dia 46

LB1 Luc Belis; 21-4-2019

LB1

Tivar Lining - Optimised lining material

- Lining industrial equipment:
  - Cyclone loader bucket

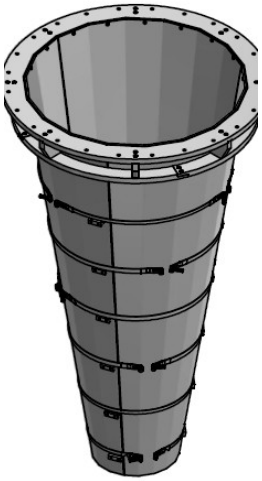

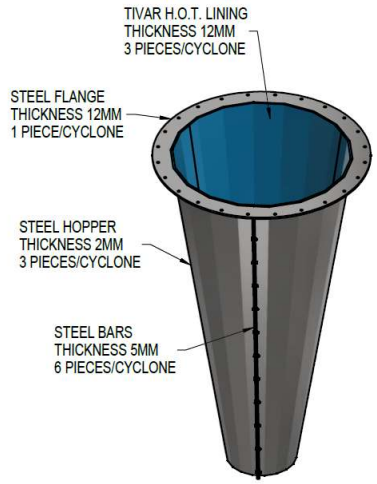

Wheel

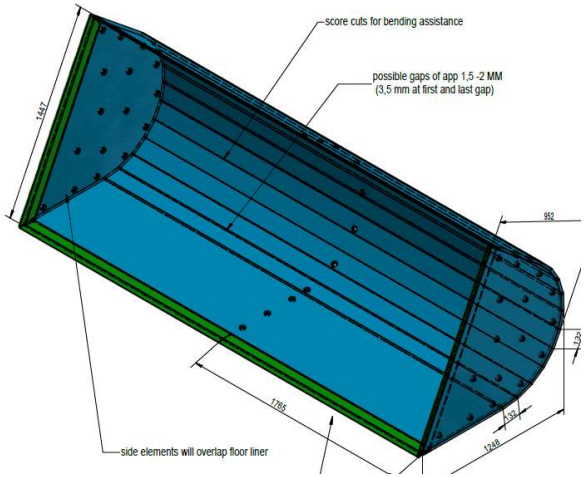

  - Gutter

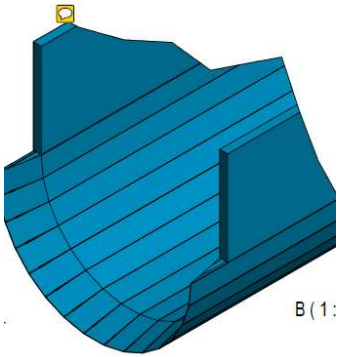

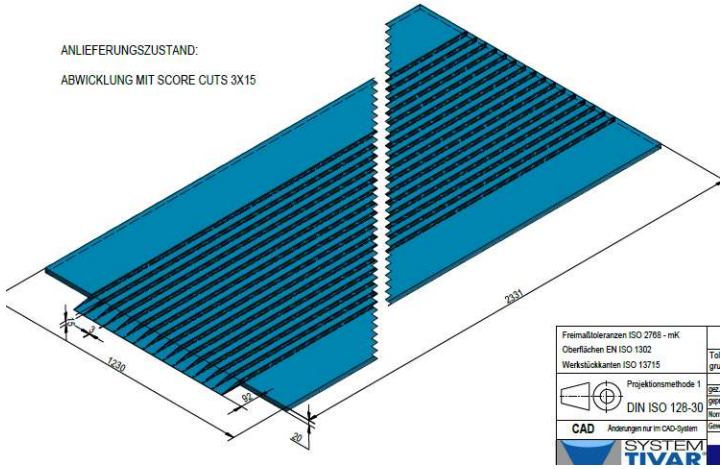

Dia 47

LB1 Luc Belis; 21-4-2019

LB2

VATIS

Tivar Lining - Bunkers

Zinc Ore bunker – wagon unloading

Dia 48

LB2 Luc Belis; 21-4-2019

LB4

VATIS

Tivar Lining - Bunkers

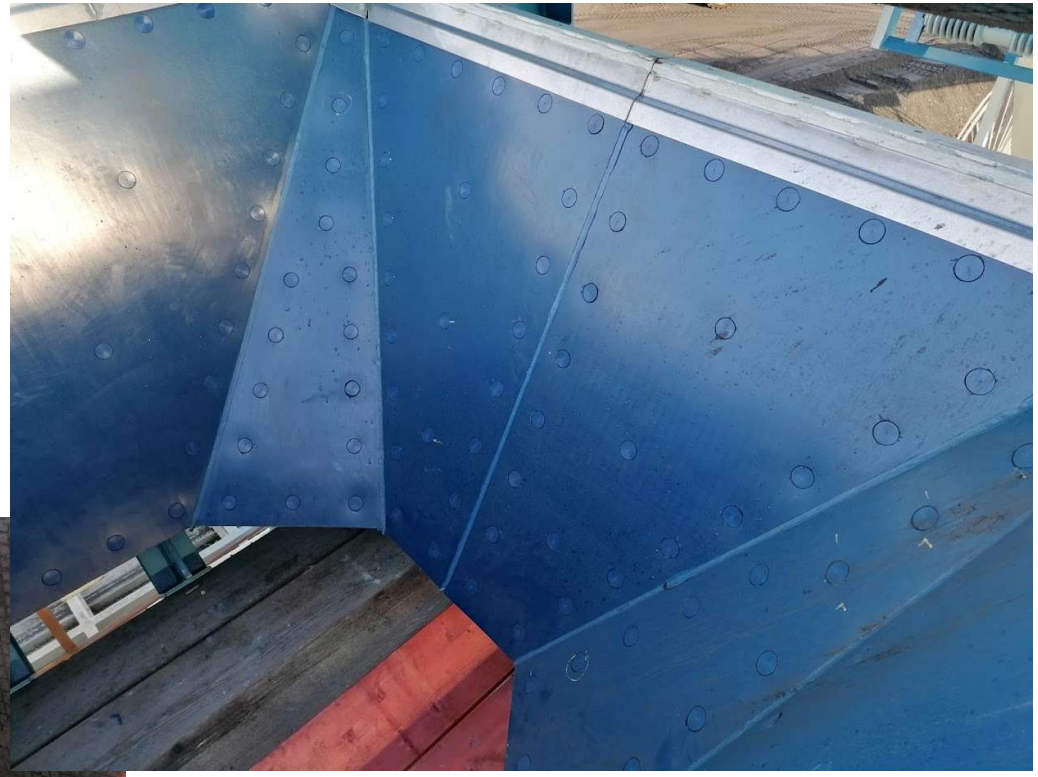

Dia 49

LB4 Luc Belis; 21-4-2019

LB3

VATIS

Tivar Lining - Train wagons

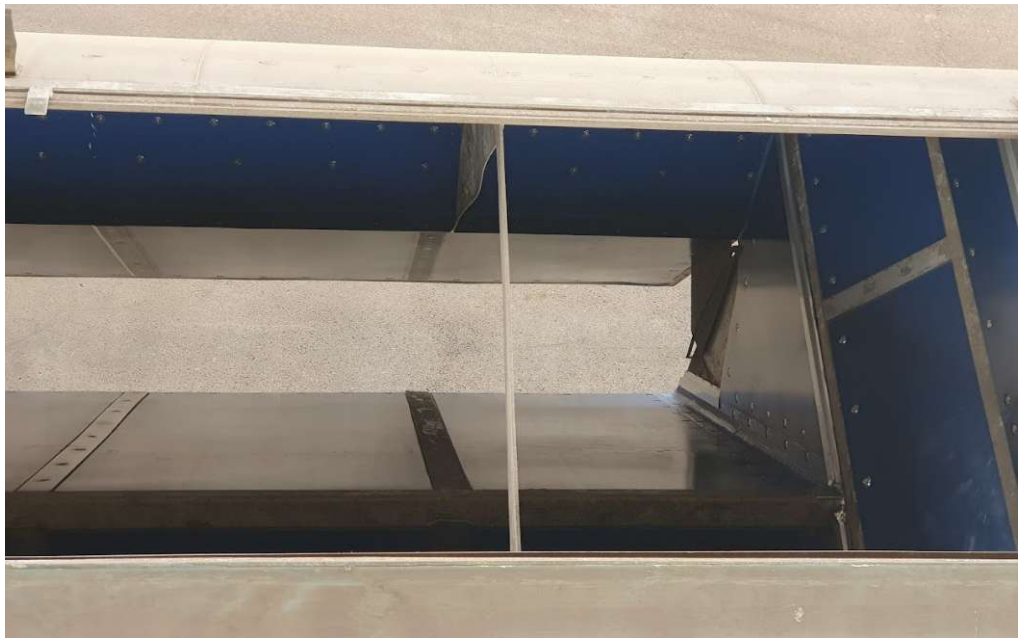

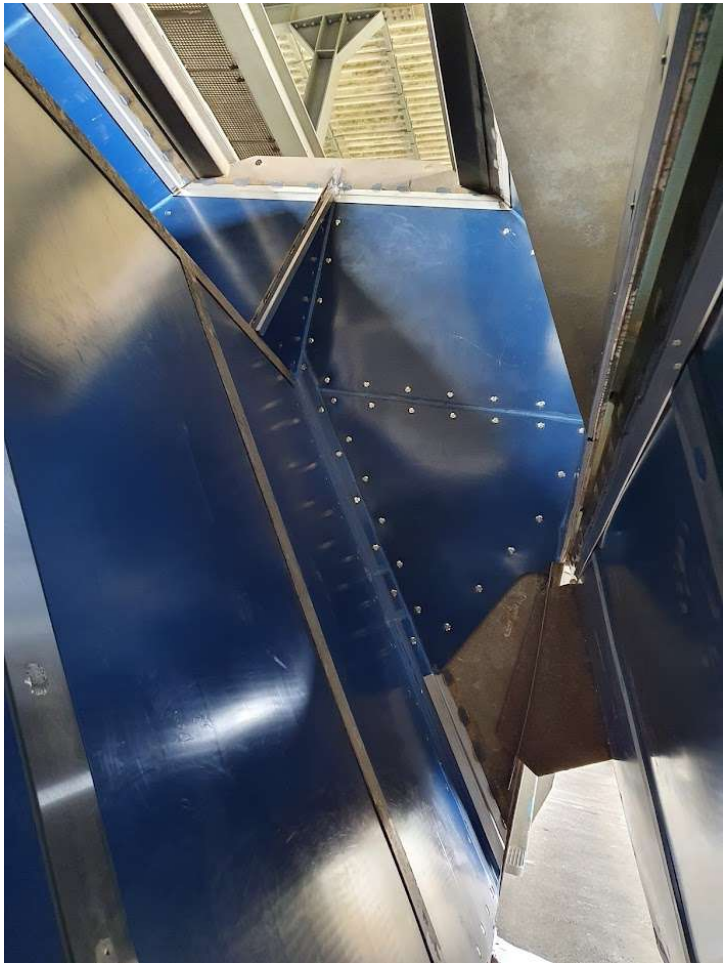

Dia 50

LB3 Luc Belis; 21-4-2019

LB5

VATIS

Tivar Lining - Sea Ship

Dia 51

LB5 Luc Belis; 21-4-2019

VATIS

Oplossingen tegen slijtage en aanplakken

Vatis bv
Elzasweg 12
BE-2030 ANTWERPEN
+32 9 366 63 91

info@vatis.be
www.vatis.be