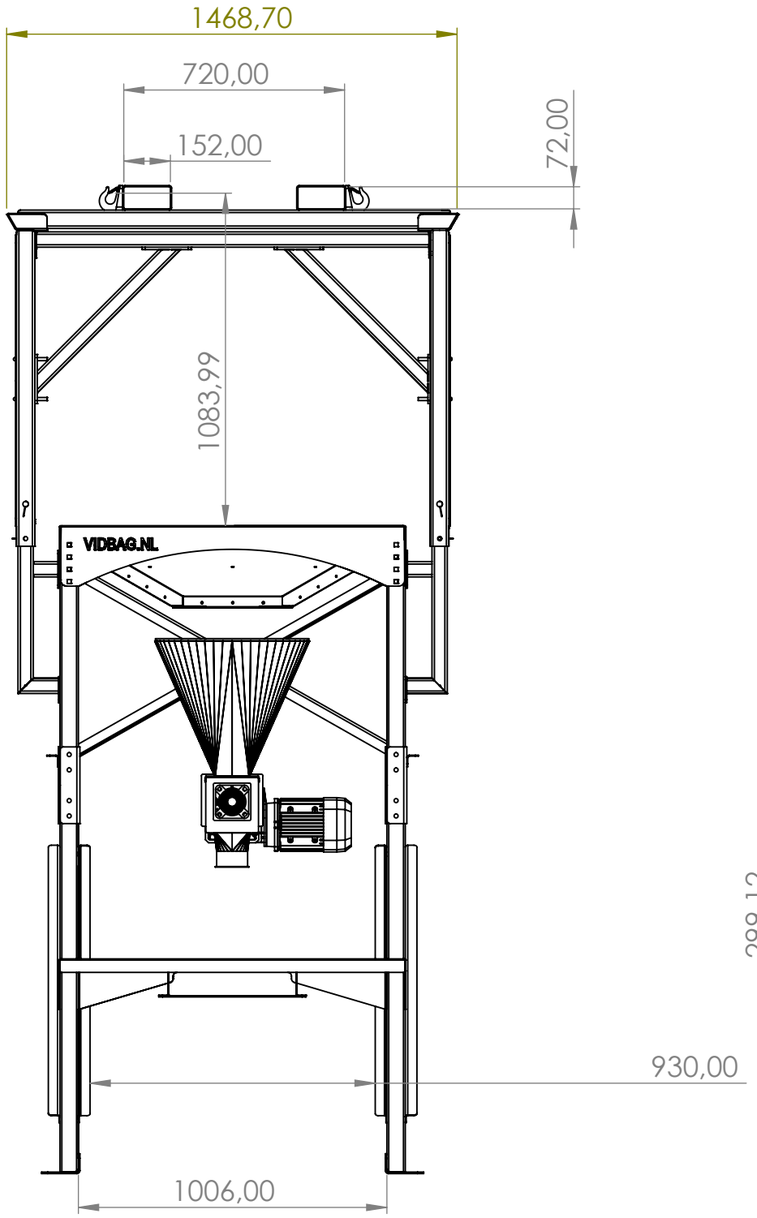

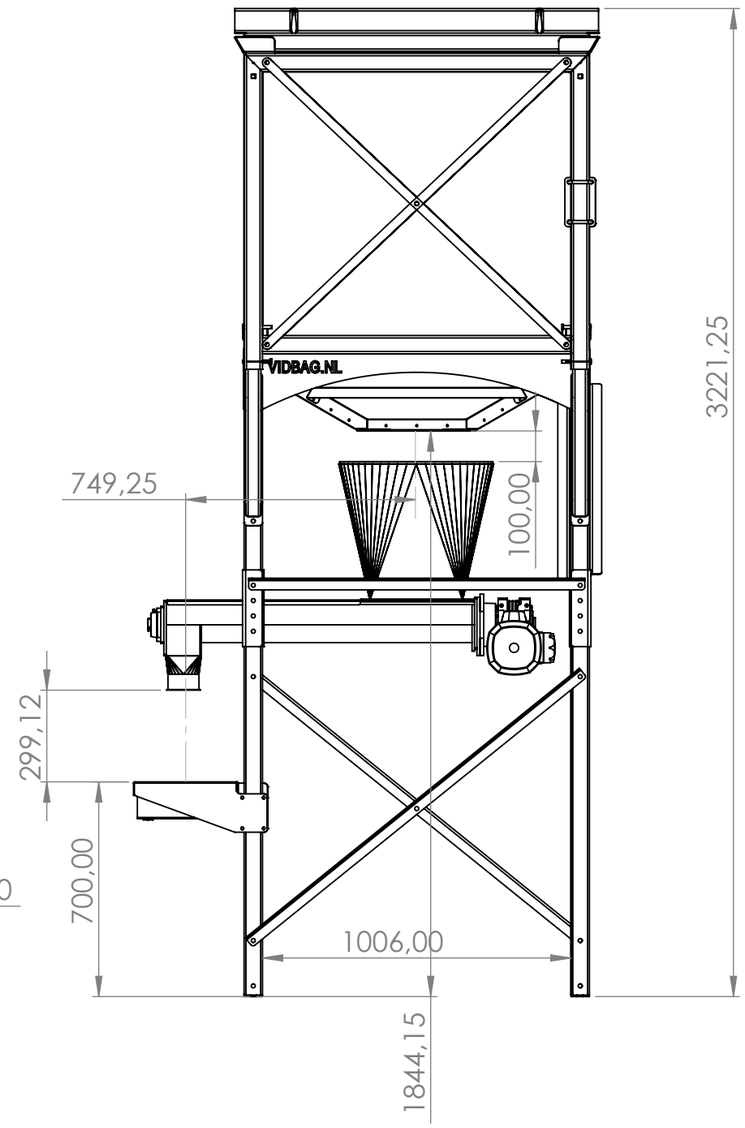

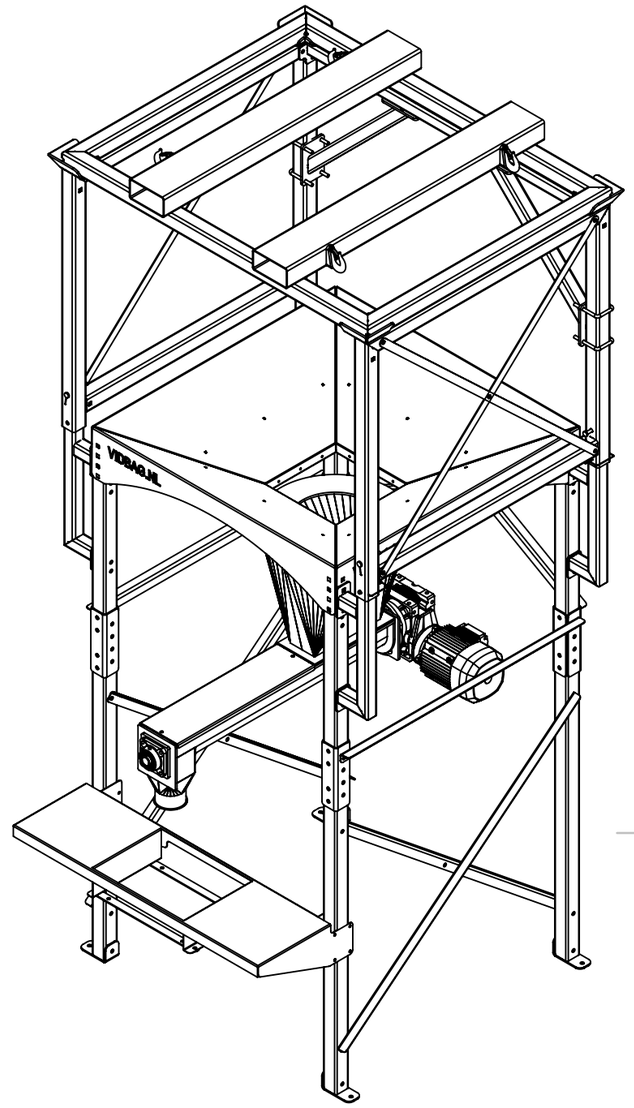

VID BAG® BIGBAG DOSEER SYSTEMEN VIDBAG.NL

Amatrex Agricultural machinery

Enserweg 16
8307 PM Ens
The Netherlands
+31(0)6 526 136 04

DEBURR AND BREAK SHARP EDGES

DO NOT SCALE DRAWING

REVISION

DESCRIPTION:

	NAME	SIGNATURE	DATE
DRAWN	Sjoerd		15-1-2025
CHK'D			
APPV'D			
MFG			
Q.A			

TITLE:

Ingeklapt

MATERIAL:

WEIGHT: gram

DWG NO.

25006 - Modulo Hi-DS

A3

SCALE:1:20

SHEET 1 OF 2

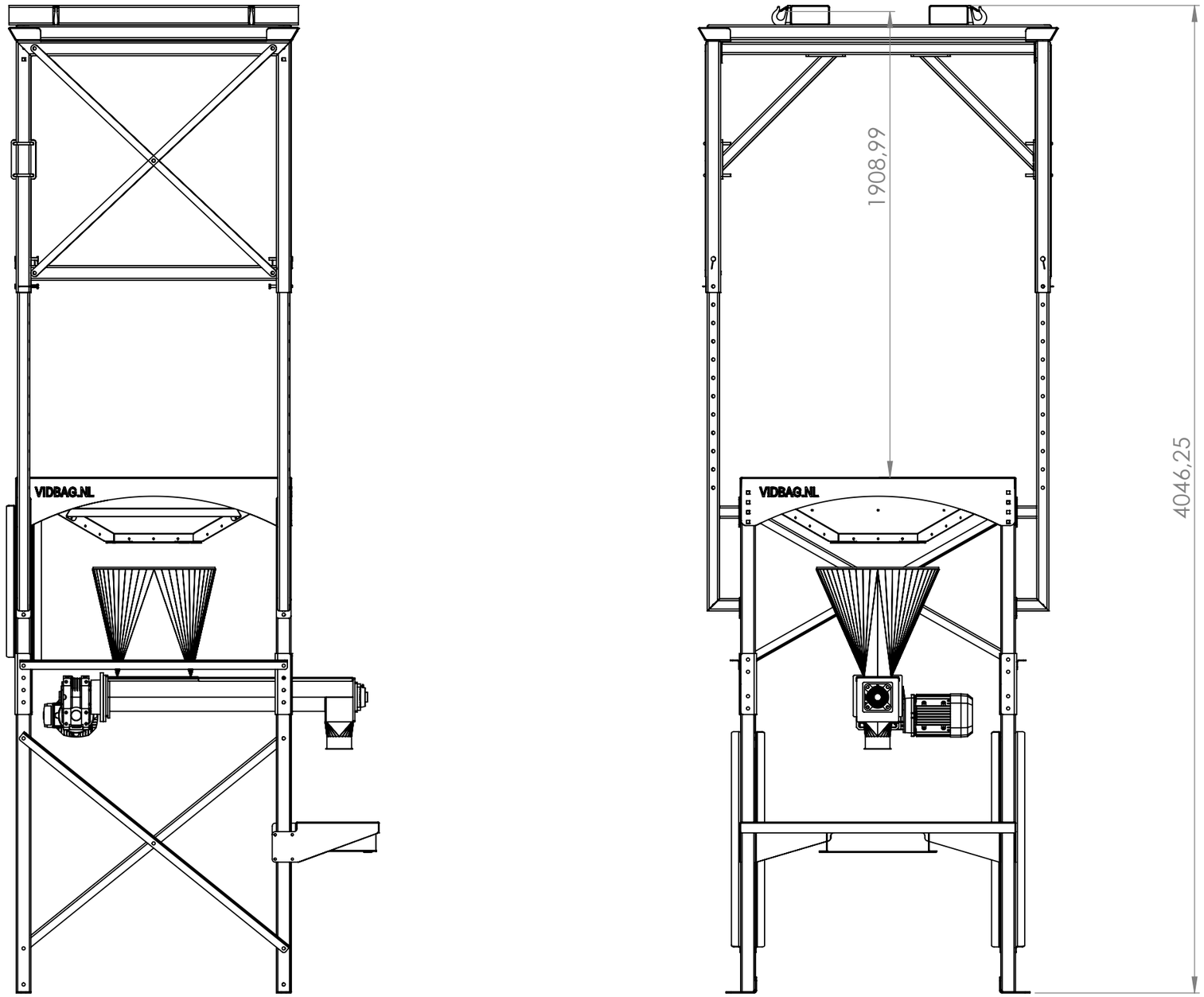

VID BAG® BIGBAG DOSEER SYSTEMEN VIDBAG.NL
Amatrex Agricultural machinery
Enserweg 16
8307 PM Ens
The Netherlands
+31(0)6 526 136 04

DEBURR AND BREAK SHARP EDGES

DO NOT SCALE DRAWING

REVISION

DESCRIPTION:

	NAME	SIGNATURE	DATE
DRAWN	Sjoerd		15-1-2025
CHK'D			
APPV'D			
MFG			
Q.A			

TITLE:

Uitgeklapt

MATERIAL:

WEIGHT: gram

DWG NO.

25006 - Modulo Hi Berko

A3

SCALE:1:20

SHEET 2 OF 2