INNOMOTICS

Trend-setting Innovation

IE5 Permanent Magnet Motors

PM motors with efficiency class IE5 – the pinnacle of internationally recognized efficiency levels and even higher.

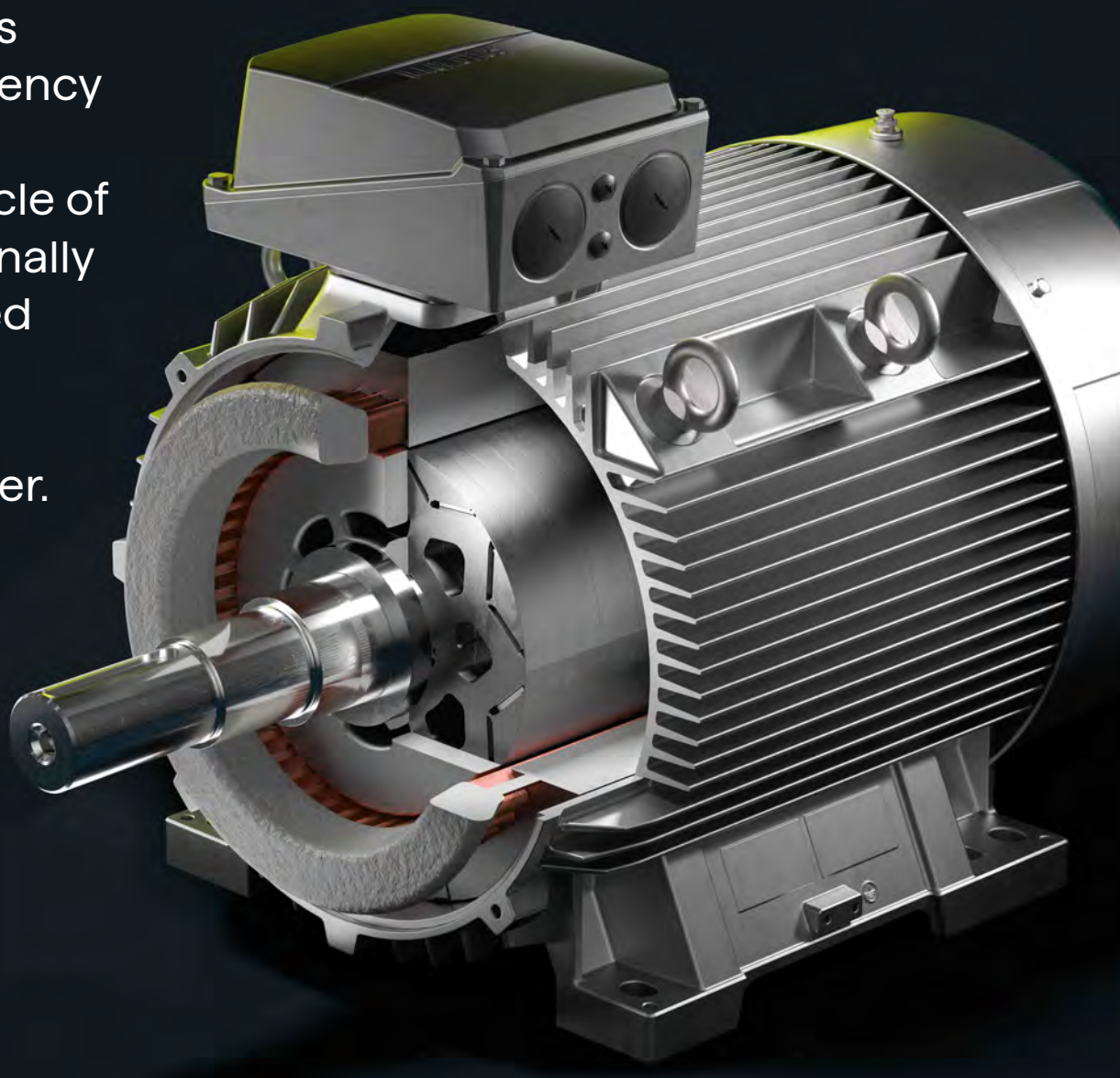

Permanent Magnet Motors

As global industries strive to achieve sustainable and energy-efficient processes, **Innomotics permanent magnet (PM) motors**, conforming to the **IE5 efficiency class**, represent future-proof and leading-edge drives for motion applications.

The brochure provides an insight into Innomotics' cutting-edge technology. It shows the advantages and customer benefits in a wide range of applications.

The principle of permanent magnet motors

As the name suggests, permanent magnets represent the core of the motors. These are predominantly fabricated from rare-earth materials which produce a consistent magnetic field. With their integrated magnets, PM motors do not require an electrical current to generate a magnetic field in the rotor, which sets them apart from conventional induction motors. This principle results in the higher efficiency of these types of motors.

The advantages of permanent magnets

Rare-earth magnets are the driving force behind the high efficiency levels of Innomotics PM motors. These rare-earth magnets have magnetic properties that far surpass those of conventional ferrite magnets. They provide a higher power density, allowing for smaller, lighter and more efficient motors than those using ferrite magnets.

IE5 efficiency and beyond

Innomotics, a pioneer in motor technology, showcases its commitment to groundbreaking innovation through its PM motors. These motors comply with the IE5 efficiency class – the pinnacle of internationally recognized efficiency levels and even higher.

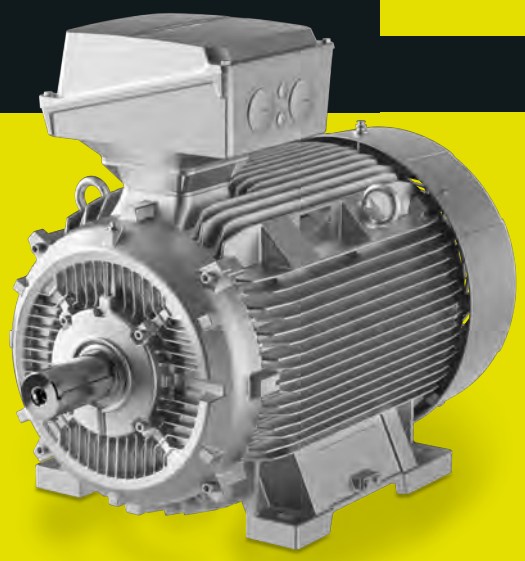

Key features of our PM motors include:

High torque and power density: Based on the innovative design, this motor can deliver the same torque from a smaller frame size when compared to induction motor technology.

Unparalleled efficiency:
Complying with the IE5 efficiency class, these motors set themselves apart as a result of their high energy efficiency. This has a positive impact on operational expenses and the carbon footprint.

High efficiency in the partial load range: PM motors are able to deliver significantly higher energy efficiency values in the partial load range and at lower speeds.

Reduced weight:
As a result of the motor design and higher torque density, PM motors tend to weigh less than conventional induction motors with a comparable power rating.
This lower weight makes them ideal for applications where the overall weight is a critical factor.

Design flexibility:
The inherent properties of PM motors, such as their compactness and reduced weight, provide machine OEMs with a higher degree of flexibility. This is especially advantageous in applications where space is at a premium and compact motors are required.

Wide operating range:
PM motors are well known for their wide speed range without compromising efficiency and ensuring a high degree of flexibility in addressing various applications.

High torque density:
PM motors offer a higher torque per unit volume compared to many conventional motor designs, facilitating a high performance and compact drive.

Enhanced dynamic performance:
PM motors accelerate and decelerate quickly, making them the obvious choice for applications where speed and direction change rapidly.

Cooler operation:
With no rotor current losses, PM motors frequently operate at cooler temperatures, extending component lifetimes and reducing thermal stress.

Applications

From individual applications up to large-scale infrastructure projects in industry, the unparalleled efficiency, compactness and superior performance of PM motors make them the obvious choice. Innomotics has PM motors suitable for applications such as material handling, HVAC, water and wastewater, automotive, food processing, textiles – to name just a few. PM motors are not limited to conventional applications, but excel in other demanding use cases, especially where constant torque is required or high power density is a decisive factor.

The wide field of applications that can be addressed includes the following, for example:

- Pumps
- Fans
- Blowers
- Compressors
- Conveyor belts
- Extruders
- Mixers

Design

Innomotics PM motors are based on 1LE platform, allowing customer to benefit from mechanical interchangeability and using wide range of the same options in almost all applications.

Characteristics of Innomotics PM motors:

- Designed for variable speed applications, with a focus on highly efficient operation and rugged torque characteristics.
- Low operating costs prioritized.
- Optimized for operation with Danfoss and Siemens frequency converters.
- Compatible with all converters supporting PM motor technology.

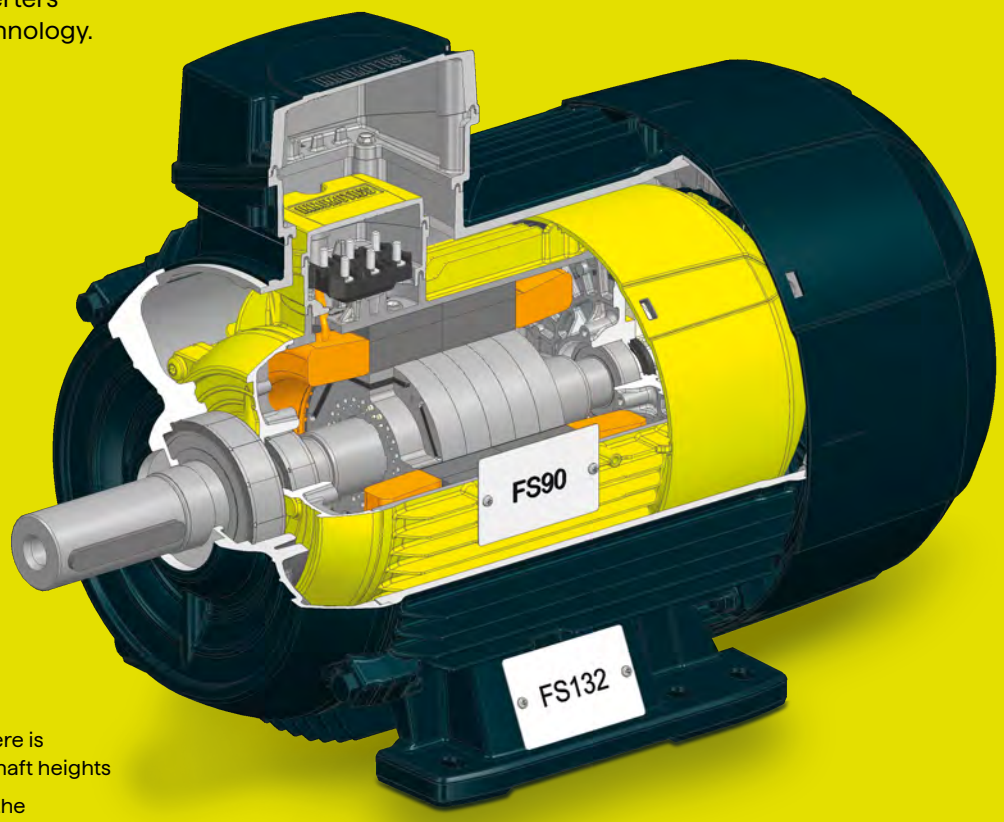

Thanks to high power density there is a potential of reduction up to 3 shaft heights

5.5 kW, SH90 PM motor inside of the 5.5 kW, SH132 Asynchronous motor

Technical specifications

- Motor type: 1FZ
- Operation: converter operation
- Power range: 0.37 – 250 kW
- Shaft height: 71, 90, 132, 180, 225, 280 mm
  More frame sizes are in preparation.
- Rated speed: 1500 and 3000 rpm
- Cooling method:
  IC411 (self-ventilation), optionally
  IC416 (forced ventilation)
- Degree of protection: IP55
- Connection type: star
- Vibration level: grade A

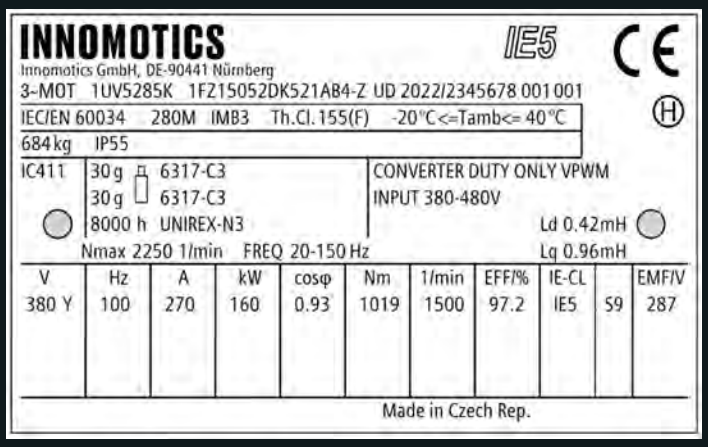

Rating plate

The PM motor rating plate has all the information required to quickly and easily commission a variable speed drive.
As is standard for Innomotics motors, the rating plate also provides all the information that is required to identify the motor.

Torque characteristics

Our cutting-edge permanent magnet motors redefine performance with an extension of a rated torque over a wide speed range – from zero speed up to the rated speed – without requiring forced ventilation.

Innomotics PM motors have up to 200% short time overload capability. Whether it's low-speed precision or high-speed applications, our motors can be deployed in more applications than were previously possible for comparable induction motors.

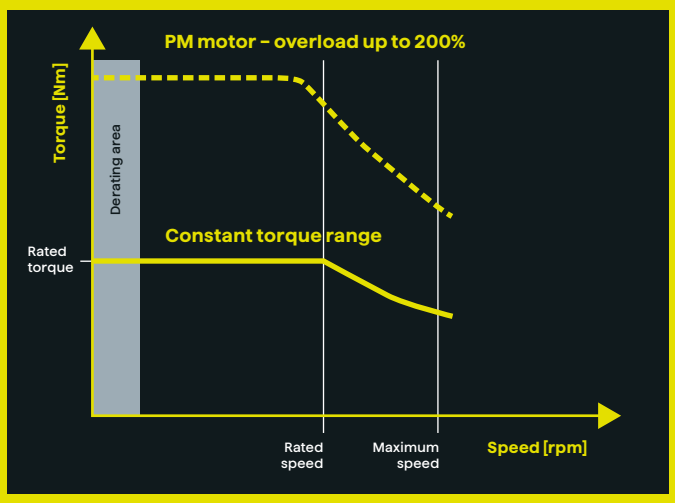

In an area close to zero speed, torque derating might be needed within a marked section on the torque characteristics. For precise details on torque characteristics for each motor, please refer to our product configurator.

configurator.innomotics.com

Efficiency characteristics

Efficiency Maps Explained:
Efficiency maps are graphical representations that showcase an electric motor's efficiency in base speed region. Typically, torque (Nm) is plotted on the vertical axis, and speed (RPM) on the horizontal axis. The color-coded contours indicate efficiency levels, with yellow regions representing higher efficiency. In the case of the system based on Innomotics IE5 permanent magnet motor, its map shows broader areas of high efficiency compared to the system based on IE4 induction motor.

IE5 vs. IE4 Efficiency:
The IE5 permanent magnet motor surpasses the IE4 induction motor in efficiency at all seven load points, as defined by IEC TS 60034-30-2:2016. The IE5 motor's superior performance is attributed to reduced losses leading to significant energy savings.

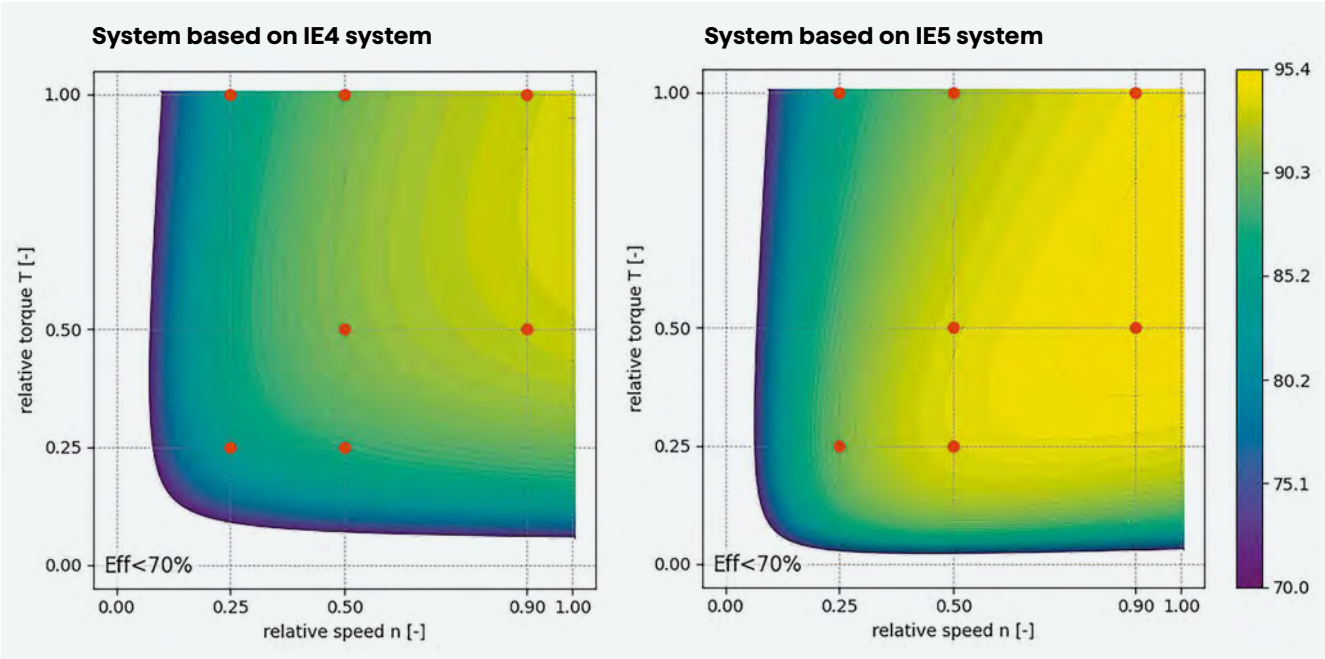

The documentation available in our product configurator contains efficiency values for all seven load points.

Motor Features

Insulation system

PM motors have an advanced insulation system designed for converter operation, ensuring a long winding lifetime without any associated risks.

Admissible voltage peaks:

$U_{phase\text{-}to\text{-}phase} \leq 1600$ V,

$U_{phase\text{-}to\text{-}ground} \leq 1400$ V,

$t_s > 0.1$ µs

Thermal protection

As standard thermal protection of Innomotics PM motors, customers have the option of either selecting PTC or Pt1000 at no additional price.

– 3 x PTC – order number at position 15 (letter B)
– 1 x PT1000 – order number at position 15 (letter K)

Innomotics offers several other thermal protection options, safeguarding the motor winding against overheating due to phase loss, overload or voltage fluctuations, including undervoltage and overvoltage conditions.

Bearing current protection

All PM motors in the SH225 and above from Innomotics have insulated NDE bearings as standard. This ensures a longer motor bearing system service life, while also allowing standard bearings to be used instead of hybrid bearings. This design reduces maintenance costs over the motor's lifetime.

Control methods

Topology of the rotor design allows encoderless operation in complete speed range. When teamed up with variable speed drives (VSD), these motors offer unparalleled precision and versatility.

Vector control (field-oriented control):
Vector control, also known as field-oriented control (FOC), provides more precise motor torque and speed control. By decoupling the motor's torque-producing current from the magnetizing current, FOC allows the torque and flux to be independently controlled, thereby providing more precise control dynamics.

Smooth operation without an encoder is inherently possible.

Applications: Ideally suited for applications demanding fast torque changes and high precision.

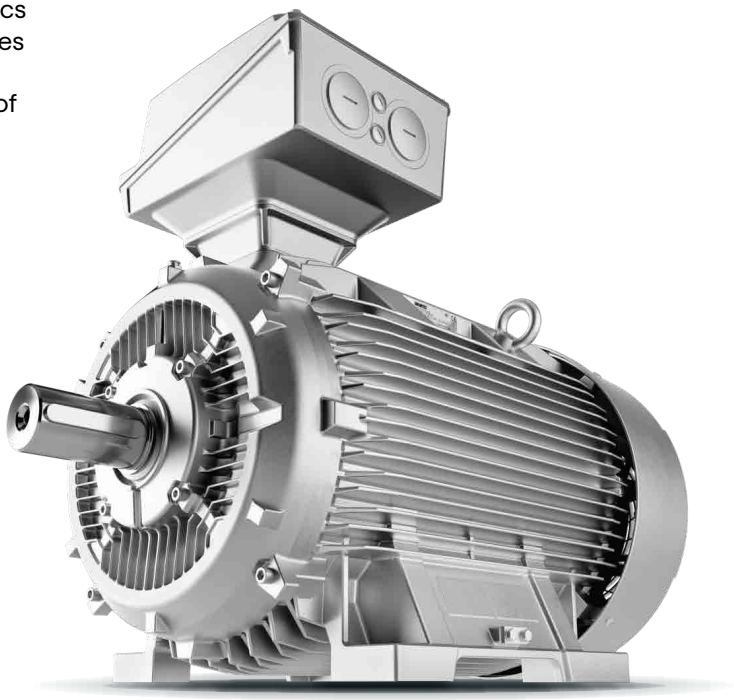

Order number	Rated power [kW]	Rated torque [Nm]	Rated current [A]	Rated power factor	Efficiency [%]	Maximum speed [rpm]	Maximum torque/ rated torque	bEMF at rated speed (20°C) [V]	Moment of inertia [kg.m²]	Weight [kg]	Efficiency class
Shaft height 71, aluminum frame											
3000 rpm											
1FZ1005-0CL3.-....	0.55	1.75	1.04	0.95	84.6	4500	2	321	0.00043	5	IE5
1FZ1005-0CL4.-....	0.75	2.40	1.39	0.95	86.3	4500	2	306	0.00043	5	IE5
1FZ1005-0CL5.-....	1.1	3.50	2.00	0.95	87.8	4500	2	306	0.00055	6	IE5
1FZ1005-0CL6.-....	1.50	4.75	2.70	0.95	88.9	4500	2	306	0.00068	6	IE5
1500 rpm											
1FZ1005-0CK3.-....	0.37	2.35	0.70	0.95	84.3	2250	2	293	0.00043	5	IE5
1FZ1005-0CK4.-....	0.55	3.50	1.01	0.95	86.7	2250	2	308	0.00068	6	IE5
1FZ1005-0CK5.-....	0.75	4.75	1.35	0.95	88.2	2250	2	305	0.00081	7	IE5
1FZ1005-0CK6.-....	1.10	7.0	1.97	0.95	89.5	2250	2	305	0.0011	8	IE5
Shaft height 71, cast iron frame											
3000 rpm											
1FZ1505-0CL3.-....	0.55	1.75	1.04	0.95	84.6	4500	2	321	0.00043	11	IE5
1FZ1505-0CL4.-....	0.75	2.40	1.39	0.95	86.3	4500	2	306	0.00043	11	IE5
1FZ1505-0CL5.-....	1.1	3.50	2.00	0.95	87.8	4500	2	306	0.00055	12	IE5
1FZ1505-0CL6.-....	1.50	4.75	2.70	0.95	88.9	4500	2	306	0.00068	12	IE5
1500 rpm											
1FZ1505-0CK3.-....	0.37	2.35	0.70	0.95	84.3	2250	2	293	0.00043	11	IE5
1FZ1505-0CK4.-....	0.55	3.50	1.01	0.95	86.7	2250	2	308	0.00068	12	IE5
1FZ1505-0CK5.-....	0.75	4.75	1.35	0.95	88.2	2250	2	305	0.00081	13	IE5
1FZ1505-0CK6.-....	1.10	7.0	1.97	0.95	89.5	2250	2	305	0.0011	15	IE5
Shaft height 90, aluminum frame											
3000 rpm											
1FZ1005-0EL4.-....	2.2	7	3.9	0.95	90.2	4500	2	330	0.00175	10	IE5
1FZ1005-0EL5.-....	3	9.5	5.3	0.95	91.1	4500	2	339	0.00226	11	IE5
1FZ1005-0EL6.-....	4	13	7	0.95	91.8	4500	2	327	0.00277	13	IE5
1FZ1005-0EL7.-....	5.5	18	9.5	0.95	92.6	4500	2	324	0.00328	14	IE5
1FZ1005-0EL8.-....*	7.5	24	12.9	0.95	93.3	4500	2	328	0.00389	15	IE5
1500 rpm											
1FZ1005-0EK4.-....	1.5	9.5	2.65	0.95	90.4	2250	2	324	0.00226	11	IE5
1FZ1005-0EK5.-....	2.2	14	3.85	0.95	91.4	2250	2	330	0.00328	14	IE5
1FZ1005-0EK6.-....	3	19	5.2	0.95	92.1	2250	2	329	0.00429	16	IE5
1FZ1005-0EK7.-....	4	26	6.9	0.95	92.8	2250	2	317	0.00485	19	IE5
Shaft height 90, cast iron frame											
3000 rpm											
1FZ1505-0EL4.-....	2.2	7	3.9	0.95	90.2	4500	2	330	0.00175	20	IE5
1FZ1505-0EL5.-....	3	9.5	5.3	0.95	91.1	4500	2	339	0.00226	22	IE5
1FZ1505-0EL6.-....	4	13	7	0.95	91.8	4500	2	327	0.00277	23	IE5
1FZ1505-0EL7.-....	5.5	18	9.5	0.95	92.6	4500	2	324	0.00328	24	IE5
1FZ1505-0EL8.-....*	7.5	24	12.9	0.95	93.3	4500	2	328	0.00389	25	IE5
1500 rpm											
1FZ1505-0EK4.-....	1.5	9.5	2.65	0.95	90.4	2250	2	324	0.00226	22	IE5
1FZ1505-0EK5.-....	2.2	14	3.85	0.95	91.4	2250	2	330	0.00328	24	IE5
1FZ1505-0EK6.-....	3	19	5,2	0.95	92.1	2250	2	329	0.00429	27	IE5
1FZ1505-0EK7.-....	4	26	6,9	0.95	92.8	2250	2	317	0.00485	30	IE5

Values valid for a rated motor voltage of 380V (voltage code 2-1),
* Design available only on request

Motor Features

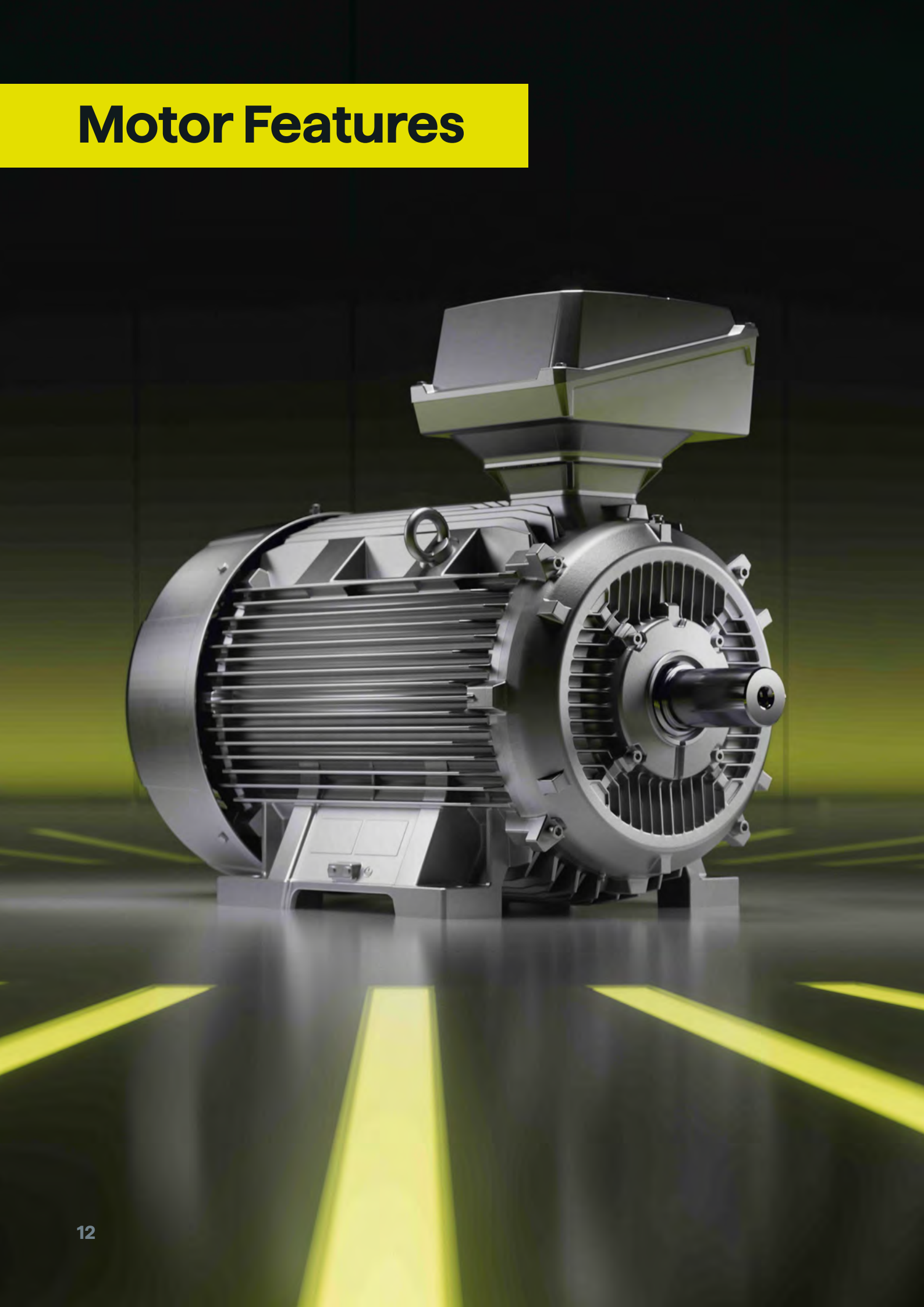

Order number	Rated power [kW]	Rated torque [Nm]	Rated current [A]	Rated power factor	Efficiency [%]	Maximum speed [rpm]	Maximum torque/ rated torque	bEMF at rated speed (20°C) [V]	Moment of inertia [kg.m²]	Weight [kg]	Efficiency class
Shaft height 132, aluminum frame											
3000 rpm											
1FZ1005-1CL2.-....	11.0	35.0	18.7	0.95	94.0	4500	2	321	0.01766	30	IE5
1FZ1005-1CL3.-....	15.0	47.5	25.5	0.95	94.5	4500	2	324	0.02301	34	IE5
1FZ1005-1CL4.-....	18.5	59	31.0	0.95	94.9	4500	2	327	0.02836	39	IE5
1FZ1005-1CL5.-....	22.0	70	37.0	0.95	95.1	4500	2	330	0.03371	43	IE5
1500 rpm											
1FZ1005-1CK0.-....	5.5	35.0	9.4	0.95	93.4	2250	2	314	0.02301	34	IE5
1FZ1005-1CK2.-....	7.5	47.5	12.8	0.95	94.0	2250	2	318	0.02836	39	IE5
1FZ1005-1CK3.-....	11.0	70	18.6	0.95	94.6	2250	2	306	0.03371	43	IE5
1FZ1005-1CK4.-....	15.0	95	25.0	0.95	95.1	2250	2	330	0.05005	58	IE5
Shaft height 132, cast iron frame											
3000 rpm											
1FZ1505-1CL2.-....	11.0	35.0	18.7	0.95	94.0	4500	2	321	0.01766	47	IE5
1FZ1505-1CL3.-....	15.0	47.5	25.5	0.95	94.5	4500	2	324	0.02301	52	IE5
1FZ1505-1CL4.-....	18.5	59	31.0	0.95	94.9	4500	2	327	0.02836	56	IE5
1FZ1505-1CL5.-....	22.0	70	37.0	0.95	95.1	4500	2	330	0.03371	60	IE5
1500 rpm											
1FZ1505-1CK0.-....	5.5	35.0	9.4	0.95	93.4	2250	2	314	0.02301	52	IE5
1FZ1505-1CK2.-....	7.5	47.5	12.8	0.95	94.0	2250	2	318	0.02836	56	IE5
1FZ1505-1CK3.-....	11.0	70	18.6	0.95	94.6	2250	2	306	0.03371	60	IE5
1FZ1505-1CK4.-....	15.0	95	25.0	0.95	95.1	2250	2	330	0.05005	77	IE5
Shaft height 180, cast iron frame											
3000 rpm											
1FZ5505-1EL3.-....	30	95.5	50.0	0.95	95.5	4500	2	293	0.120	140	IE5
1FZ5505-1EL4.-....	37	118.0	61.0	0.96	95.8	4500	2	333	0.148	150	IE5
1FZ5505-1EL5.-....	45	143.0	74.0	0.96	96.0	4500	2	332	0.204	170	IE5
1FZ5505-1EL6.-....	55	175.0	90.0	0.96	96.2	4500	2	333	0.260	190	IE5
1500 rpm											
1FZ5505-1EK2.-....	18.5	118.0	30.5	0.96	95.3	2250	2	324	0.148	150	IE5
1FZ5505-1EK4.-....	22	140.0	37.0	0.95	95.5	2250	2	315	0.176	160	IE5
1FZ5505-1EK5.-....	30	191.0	49.5	0.96	95.9	2250	2	324	0.204	170	IE5
1FZ5505-1EK6.-....	37	236.0	62.0	0.95	96.1	2250	2	333	0.260	190	IE5
1FZ5505-1EK7.-....	45	287.0	75.0	0.95	96.3	2250	2	326	0.315	210	IE5
Shaft height 225, cast iron frame											
3000 rpm											
1FZ5505-2BL2.-....	75	239	128	0.93	96.5	4500	2	357	0.47	300	IE5
1FZ5505-2BL3.-....	90	287	151	0.94	96.6	4500	2	357	0.47	300	IE5
1FZ5505-2BL4.-....	110	350	187	0.93	96.8	4500	2	360	0.65	350	IE5
1FZ5505-2BL5.-....	132	420	224	0.93	96.9	4500	2	360	0.83	395	IE5
1500 rpm											
1FZ5505-2BK2.-....	55	350	96	0.91	96.5	2250	2	338	0.53	310	IE5
1FZ5505-2BK3.-....	75	477	129	0.92	96.7	2250	2	342	0.71	370	IE5
1FZ5505-2BK4.-....	90	573	156	0.91	96.9	2250	2	336	0.83	395	IE5
Shaft height 280, cast iron frame											
3000 rpm											
1FZ1505-2DL3.-....	110	350	174	0.99	96.8	3600	1.8	401	0.84	518	IE5
1FZ1505-2DL4.-....	132	420	210	0.98	96.9	3600	1.8	393	1.01	564	IE5
1FZ1505-2DL5.-....	160	509	255	0.99	97.0	3600	1.8	418	1.29	629	IE5
1FZ1505-2DL6.-....	200	637	315	0.99	97.2	3600	1.7	401	1.57	719	IE5
1FZ1505-2DL7.-....	250	796	410	0.95	97.2	3600	1.7	375	2.02	824	IE5
1500 rpm											
1FZ1505-2DK2.-....	90	573	155	0.91	96.9	2250	1.8	325	1.31	599	IE5
1FZ1505-2DK3.-....	110	700	189	0.91	97.0	2250	1.7	322	1.49	645	IE5
1FZ1505-2DK4.-....	132	840	225	0.92	97.1	2250	1.7	334	1.67	720	IE5
1FZ1505-2DK5.-....	160	1019	270	0.93	97.2	2250	1.6	306	1.85	765	IE5
1FZ1505-2DK6.-....	200	1273	340	0.92	97.4	2250	1.6	338	2.03	805	IE5

Values valid for a rated motor voltage of 380V (voltage code 2-1)

Dimensions

IM B3 type of construction

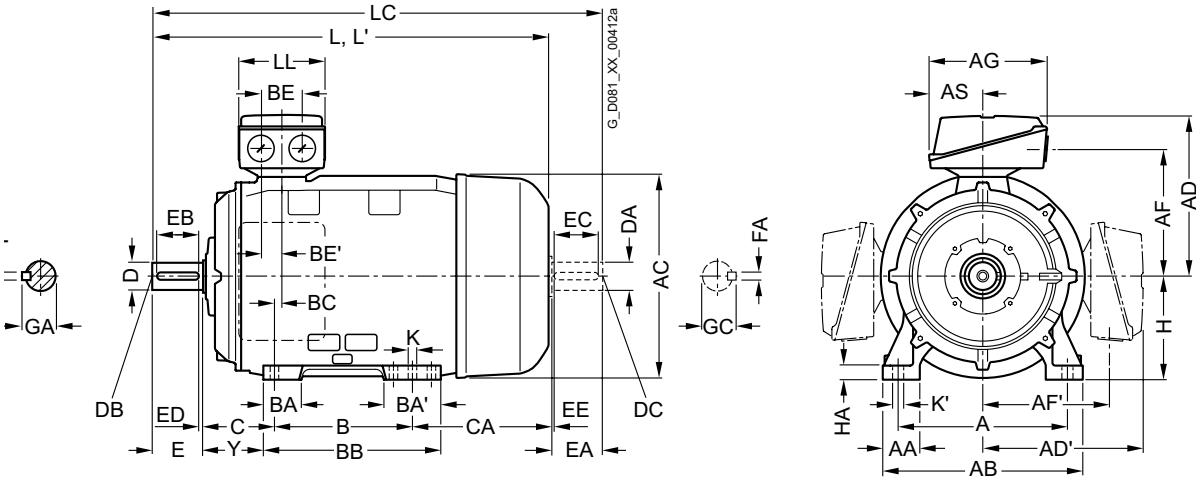

IM B5 and IM V1 types of construction

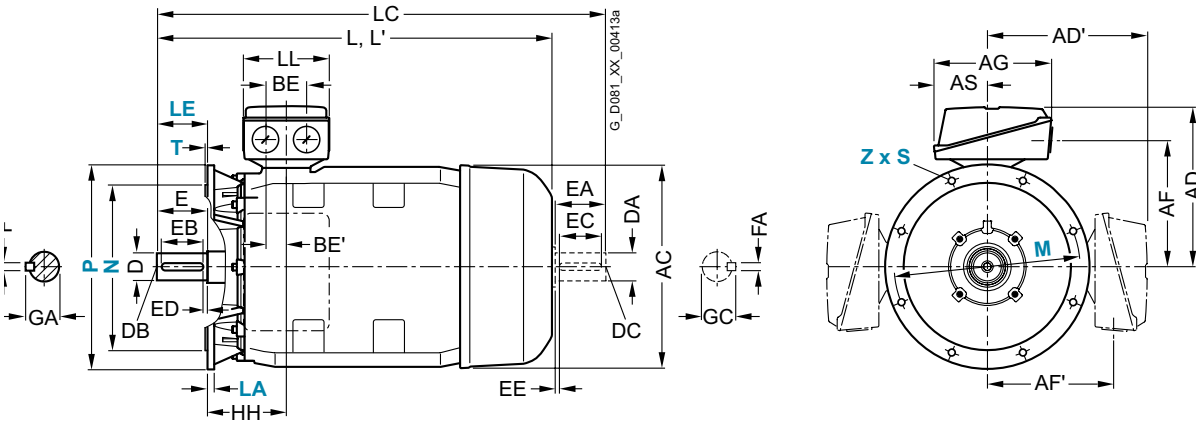

IM B35 type of construction

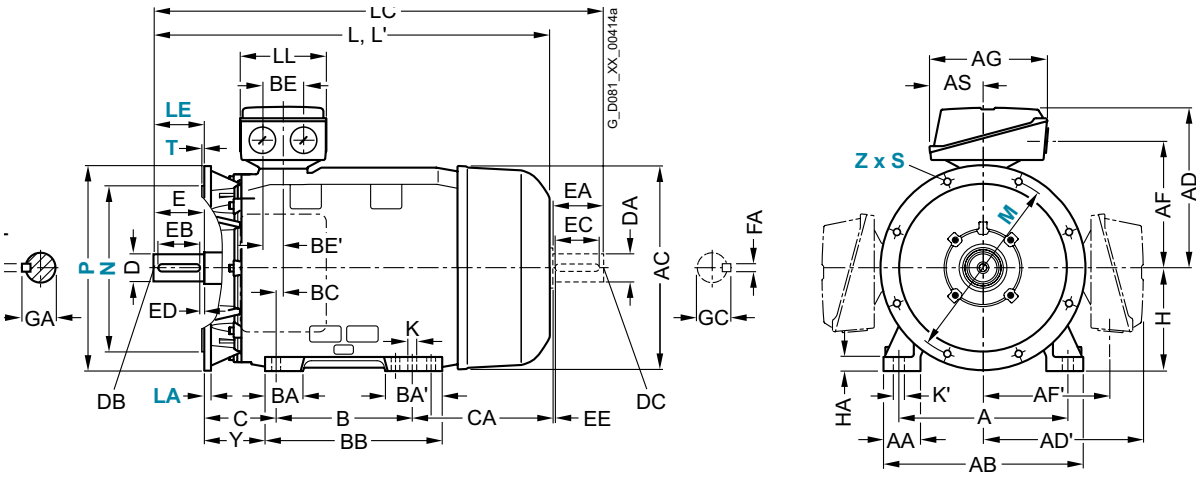

Dimensions

Rated speed [rpm]	Rated power [kW]	Motor type	A	AA	AB	AC	AD	AD'	AF	AF'	AG	AS	B	BA	BA'	BB	BC	BE	BE'	C	CA	H	HA	Y	HH	K	K'
			[mm]																								
Shaft height 71 mm, aluminum frame																											
1500	0.37	1FZ1005-0CK3.-....	112	30.5	132	145	111	-	87.5	-	75	37.5	90	27	-	106	18.5	32	18	45	75	71	7	40	63.5	7	10
1500	0.55	1FZ1005-0CK4.-....	112	30.5	132	145	111	-	87.5	-	75	37.5	90	27	-	106	18.5	32	18	45	75	71	7	40	63.5	7	10
1500	0.75	1FZ1005-0CK5.-....	112	30.5	132	145	111	-	87.5	-	75	37.5	90	27	-	106	18.5	32	18	45	75	71	7	40	63.5	7	10
1500	1.1	1FZ1005-0CK6.-....	112	30.5	132	145	111	-	87.5	-	75	37.5	90	27	-	106	18.5	32	18	45	115	71	7	40	63.5	7	10
3000	0.55	1FZ1005-0CL3.-....	112	30.5	132	145	111	-	87.5	-	75	37.5	90	27	-	106	18.5	32	18	45	75	71	7	40	63.5	7	10
3000	0.75	1FZ1005-0CL4.-....	112	30.5	132	145	111	-	87.5	-	75	37.5	90	27	-	106	18.5	32	18	45	75	71	7	40	63.5	7	10
3000	1.1	1FZ1005-0CL5.-....	112	30.5	132	145	111	-	87.5	-	75	37.5	90	27	-	106	18.5	32	18	45	75	71	7	40	63.5	7	10
3000	1.5	1FZ1005-0CL6.-....	112	30.5	132	145	111	-	87.5	-	75	37.5	90	27	-	106	18.5	32	18	45	75	71	7	40	63.5	7	10
Shaft height 71 mm, cast iron frame																											
1500	0.37	1FZ1505-0CK3.-....	112	30.5	132	145	149	149	112	112	126	62	90	32	32	106	21	36	18	45	75	71	7	37	65.5	7.5	7.5
1500	0.55	1FZ1505-0CK4.-....	112	30.5	132	145	149	149	112	112	126	62	90	32	32	106	21	36	18	45	75	71	7	37	65.5	7.5	7.5
1500	0.75	1FZ1505-0CK5.-....	112	30.5	132	145	149	149	112	112	126	62	90	32	32	106	21	36	18	45	75	71	7	37	65.5	7.5	7.5
1500	1.1	1FZ1505-0CK6.-....	112	30.5	132	145	149	149	112	112	126	62	90	32	32	106	21	36	18	45	115	71	7	37	65.5	7.5	7.5
3000	0.55	1FZ1505-0CL3.-....	112	30.5	132	145	149	149	112	112	126	62	90	32	32	106	21	36	18	45	75	71	7	37	65.5	7.5	7.5
3000	0.75	1FZ1505-0CL4.-....	112	30.5	132	145	149	149	112	112	126	62	90	32	32	106	21	36	18	45	75	71	7	37	65.5	7.5	7.5
3000	1.1	1FZ1505-0CL5.-....	112	30.5	132	145	149	149	112	112	126	62	90	32	32	106	21	36	18	45	75	71	7	37	65.5	7.5	7.5
3000	1.5	1FZ1505-0CL6.-....	112	30.5	132	145	149	149	112	112	126	62	90	32	32	106	21	36	18	45	75	71	7	37	65.5	7.5	7.5
Shaft height 90 mm, aluminum frame																											
1500	1.5	1FZ1005-0EK4.-....	140	30.5	165	178	126	126	101.5	101.5	93	43	125	33	54	143	22.5	36	18	56	134	90	10	47	78.5	10	14
1500	2.2	1FZ1005-0EK5.-....	140	30.5	165	178	126	126	101.5	101.5	93	43	125	33	54	143	22.5	36	18	56	134	90	10	47	78.5	10	14
1500	3	1FZ1005-0EK6.-....	140	30.5	165	178	126	126	101.5	101.5	93	43	125	33	54	143	22.5	36	18	56	174	90	10	47	78.5	10	14
1500	4	1FZ1005-0EK7.-....	140	30.5	165	178	126	126	101.5	101.5	93	43	125	33	54	143	22.5	36	18	56	174	90	10	47	78.5	10	14
3000	2.2	1FZ1005-0EL4.-....	140	30.5	165	178	126	126	101.5	101.5	93	43	125	33	54	143	22.5	36	18	56	134	90	10	47	78.5	10	14
3000	3	1FZ1005-0EL5.-....	140	30.5	165	178	126	126	101.5	101.5	93	43	125	33	54	143	22.5	36	18	56	134	90	10	47	78.5	10	14
3000	4	1FZ1005-0EL6.-....	140	30.5	165	178	126	126	101.5	101.5	93	43	125	33	54	143	22.5	36	18	56	134	90	10	47	78.5	10	14
3000	5.5	1FZ1005-0EL7.-....	140	30.5	165	178	126	126	101.5	101.5	93	43	125	33	54	143	22.5	36	18	56	134	90	10	47	78.5	10	14
3000	7.5	1FZ1005-0EL8.-....	140	30.5	165	178	126	126	101.5	101.5	93	43	125	33	54	143	22.5	36	18	56	134	90	10	47	78.5	10	14
Shaft height 90 mm, cast iron frame																											
1500	1.5	1FZ1505-0EK4.-....	140	30.5	165	180	164	164	127	127	126	62	125	33	54	143	22.5	36	18	56	134	90	11	47	79.5	10	10
1500	2.2	1FZ1505-0EK5.-....	140	30.5	165	180	164	164	127	127	126	62	125	33	54	143	22.5	36	18	56	134	90	11	47	79.5	10	10
1500	3	1FZ1505-0EK6.-....	140	30.5	165	180	164	164	127	127	126	62	125	33	54	143	22.5	36	18	56	174	90	11	47	79.5	10	10
1500	4	1FZ1505-0EK7.-....	140	30.5	165	180	164	164	127	127	126	62	125	33	54	143	22.5	36	18	56	174	90	11	47	79.5	10	10
3000	2.2	1FZ1505-0EL4.-....	140	30.5	165	180	164	164	127	127	126	62	125	33	54	143	22.5	36	18	56	134	90	11	47	79.5	10	10
3000	3	1FZ1505-0EL5.-....	140	30.5	165	180	164	164	127	127	126	62	125	33	54	143	22.5	36	18	56	134	90	11	47	79.5	10	10
3000	4	1FZ1505-0EL6.-....	140	30.5	165	180	164	164	127	127	126	62	125	33	54	143	22.5	36	18	56	134	90	11	47	79.5	10	10
3000	5.5	1FZ1505-0EL7.-....	140	30.5	165	180	164	164	127	127	126	62	125	33	54	143	22.5	36	18	56	134	90	11	47	79.5	10	10
3000	7.5	1FZ1505-0EL8.-....	140	30.5	165	180	164	164	127	127	126	62	125	33	54	143	22.5	36	18	56	134	90	11	47	79.5	10	10

Dimension designation acc. to IEC

Rated speed [rpm]	Rated power [kW]	Motor type	L	LA	LC	LE	LL	D	DB	E	EB	ED	F	GA	DA	DC	EA	EC	EE	FA	GC	M	N	P	S	T	Z
			[mm]																								
Shaft height 71 mm, aluminum frame																											
1500	0.37	1FZ1005-0CK3.-....	240	9	278	30	75	14	M5	30	22	4	5	16	14	M5	30	22	4	5	16	130	110	160	10	3.5	4
1500	0.55	1FZ1005-0CK4.-....	240	9	278	30	75	14	M5	30	22	4	5	16	14	M5	30	22	4	5	16	130	110	160	10	3.5	4
1500	0.75	1FZ1005-0CK5.-....	240	9	278	30	75	14	M5	30	22	4	5	16	14	M5	30	22	4	5	16	130	110	160	10	3.5	4
1500	1.1	1FZ1005-0CK6.-....	280	9	318	30	75	14	M5	30	22	4	5	16	14	M5	30	22	4	5	16	130	110	160	10	3.5	4
3000	0.55	1FZ1005-0CL3.-....	240	9	278	30	75	14	M5	30	22	4	5	16	14	M5	30	22	4	5	16	130	110	160	10	3.5	4
3000	0.75	1FZ1005-0CL4.-....	240	9	278	30	75	14	M5	30	22	4	5	16	14	M5	30	22	4	5	16	130	110	160	10	3.5	4
3000	1.1	1FZ1005-0CL5.-....	240	9	278	30	75	14	M5	30	22	4	5	16	14	M5	30	22	4	5	16	130	110	160	10	3.5	4
3000	1.5	1FZ1005-0CL6.-....	240	9	278	30	75	14	M5	30	22	4	5	16	14	M5	30	22	4	5	16	130	110	160	10	3.5	4
Shaft height 71 mm, cast iron frame																											
1500	0.37	1FZ1505-0CK3.-....	240	5	278	30	102	14	M5	30	22	4	5	16	14	M5	30	22	4	5	16	130	110	160	10	3.5	4
1500	0.55	1FZ1505-0CK4.-....	240	5	278	30	102	14	M5	30	22	4	5	16	14	M5	30	22	4	5	16	130	110	160	10	3.5	4
1500	0.75	1FZ1505-0CK5.-....	240	5	278	30	102	14	M5	30	22	4	5	16	14	M5	30	22	4	5	16	130	110	160	10	3.5	4
1500	1.1	1FZ1505-0CK6.-....	280	5	318	30	102	14	M5	30	22	4	5	16	14	M5	30	22	4	5	16	130	110	160	10	3.5	4
3000	0.55	1FZ1505-0CL3.-....	240	5	278	30	102	14	M5	30	22	4	5	16	14	M5	30	22	4	5	16	130	110	160	10	3.5	4
3000	0.75	1FZ1505-0CL4.-....	240	5	278	30	102	14	M5	30	22	4	5	16	14	M5	30	22	4	5	16	130	110	160	10	3.5	4
3000	1.1	1FZ1505-0CL5.-....	240	5	278	30	102	14	M5	30	22	4	5	16	14	M5	30	22	4	5	16	130	110	160	10	3.5	4
3000	1.5	1FZ1505-0CL6.-....	240	5	278	30	102	14	M5	30	22	4	5	16	14	M5	30	22	4	5	16	130	110	160	10	3.5	4
Shaft height 90 mm, aluminum frame																											
1500	1.5	1FZ1005-0EK4.-....	347	10	405	50	79	24	M8	50	40	5	8	2	19	M6	40	32	4	6	21.5	165	130	200	12	3.5	4
1500	2.2	1FZ1005-0EK5.-....	347	10	405	50	79	24	M8	50	40	5	8	2	19	M6	40	32	4	6	21.5	165	130	200	12	3.5	4
1500	3	1FZ1005-0EK6.-....	387	10	445	50	79	24	M8	50	40	5	8	2	19	M6	40	32	4	6	21.5	165	130	200	12	3.5	4
1500	4	1FZ1005-0EK7.-....	387	10	445	50	79	24	M8	50	40	5	8	2	19	M6	40	32	4	6	21.5	165	130	200	12	3.5	4
3000	2.2	1FZ1005-0EL4.-....	347	10	405	50	79	24	M8	50	40	5	8	2	19	M6	40	32	4	6	21.5	165	130	200	12	3.5	4
3000	3	1FZ1005-0EL5.-....	347	10	405	50	79	24	M8	50	40	5	8	2	19	M6	40	32	4	6	21.5	165	130	200	12	3.5	4
3000	4	1FZ1005-0EL6.-....	347	10	405	50	79	24	M8	50	40	5	8	2	19	M6	40	32	4	6	21.5	165	130	200	12	3.5	4
3000	5.5	1FZ1005-0EL7.-....	347	10	405	50	79	24	M8	50	40	5	8	2	19	M6	40	32	4	6	21.5	165	130	200	12	3.5	4
3000	7.5	1FZ1005-0EL8.-....	347	10	405	50	79	24	M8	50	40	5	8	2	19	M6	40	32	4	6	21.5	165	130	200	12	3.5	4
Shaft height 90 mm, cast iron frame																											
1500	1.5	1FZ1505-0EK4.-....	347	10	405	50	102	24	M8	50	40	5	8	2	19	M6	40	27	4	6	21.5	165	130	200	12	3.5	4
1500	2.2	1FZ1505-0EK5.-....	347	10	405	50	102	24	M8	50	40	5	8	2	19	M6	40	27	4	6	21.5	165	130	200	12	3.5	4
1500	3	1FZ1505-0EK6.-....	387	10	445	50	102	24	M8	50	40	5	8	2	19	M6	40	27	4	6	21.5	165	130	200	12	3.5	4
1500	4	1FZ1505-0EK7.-....	387	10	445	50	102	24	M8	50	40	5	8	2	19	M6	40	27	4	6	21.5	165	130	200	12	3.5	4
3000	2.2	1FZ1505-0EL4.-....	347	10	405	50	102	24	M8	50	40	5	8	2	19	M6	40	27	4	6	21.5	165	130	200	12	3.5	4
3000	3	1FZ1505-0EL5.-....	347	10	405	50	102	24	M8	50	40	5	8	2	19	M6	40	27	4	6	21.5	165	130	200	12	3.5	4
3000	4	1FZ1505-0EL6.-....	347	10	405	50	102	24	M8	50	40	5	8	2	19	M6	40	27	4	6	21.5	165	130	200	12	3.5	4
3000	5.5	1FZ1505-0EL7.-....	347	10	405	50	102	24	M8	50	40	5	8	2	19	M6	40	27	4	6	21.5	165	130	200	12	3.5	4
3000	7.5	1FZ1505-0EL8.-....	347	10	405	50	102	24	M8	50	40	5	8	2	19	M6	40	27	4	6	21.5	165	130	200	12	3.5	4

Dimension designation acc. to IEC

Dimensions

Rated speed [rpm]	Rated power [kW]	Motor type	A	AA	AB	AC	AD	AD'	AF	AF'	AG	AS	B	BA	BA'	BB	BC	BE	BE'	C	CA	H	HA	Y	HH	K	K'
			[mm]																								
Shaft height 132 mm, aluminum frame																											
1500	5.5	1FZ1005-1CK0.-....	216	53	256	262	202	202	159.5	159.5	155	70.5	140	38	76	218	26.5	48	24	89	156	132	15	69	115.5	12	16
1500	7.5	1FZ1005-1CK2.-....	216	53	256	262	202	202	159.5	159.5	155	70.5	178	38	76	218	26.5	48	24	89	118	132	15	69	115.5	12	16
1500	11	1FZ1005-1CK3.-....	216	53	256	262	202	202	159.5	159.5	155	70.5	178	38	76	218	26.5	48	24	89	118	132	15	69	115.5	12	16
1500	15	1FZ1005-1CK4.-....	216	53	256	262	202	202	159.5	159.5	155	70.5	178	38	76	218	26.5	48	24	89	168	132	15	69	115.5	12	16
3000	11	1FZ1005-1CL2.-....	216	53	256	262	202	202	159.5	159.5	155	70.5	178	38	76	218	26.5	48	24	89	118	132	15	69	115.5	12	16
3000	15	1FZ1005-1CL3.-....	216	53	256	262	202	202	159.5	159.5	155	70.5	178	38	76	218	26.5	48	24	89	118	132	15	69	115.5	12	16
3000	18.5	1FZ1005-1CL4.-....	216	53	256	262	202	202	159.5	159.5	155	70.5	178	38	76	218	26.5	48	24	89	118	132	15	69	115.5	12	16
3000	22	1FZ1005-1CL5.-....	216	53	256	262	202	202	159.5	159.5	155	70.5	178	38	76	218	26.5	48	24	89	118	132	15	69	115.5	12	16
Shaft height 132 mm, cast iron frame																											
1500	5.5	1FZ1505-1CK0.-....	216	53	256	281	214.5	214.5	169	169	163	80.5	140	52	89	218	26.5	48	24	89	157.5	132	15	69	115.5	12	16
1500	7.5	1FZ1505-1CK2.-....	216	53	256	281	214.5	214.5	169	169	163	80.5	140	52	89	218	26.5	48	24	89	119.5	132	15	69	115.5	12	16
1500	11	1FZ1505-1CK3.-....	216	53	256	281	214.5	214.5	169	169	163	80.5	140	52	89	218	26.5	48	24	89	119.5	132	15	69	115.5	12	16
1500	15	1FZ1505-1CK4.-....	216	53	256	281	214.5	214.5	169	169	163	80.5	140	52	89	218	26.5	48	24	89	169.5	132	15	69	115.5	12	16
3000	11	1FZ1505-1CL2.-....	216	53	256	281	214.5	214.5	169	169	163	80.5	140	52	89	218	26.5	48	24	89	119.5	132	15	69	115.5	12	16
3000	15	1FZ1505-1CL3.-....	216	53	256	281	214.5	214.5	169	169	163	80.5	140	52	89	218	26.5	48	24	89	119.5	132	15	69	115.5	12	16
3000	18.5	1FZ1505-1CL4.-....	216	53	256	281	214.5	214.5	169	169	163	80.5	140	52	89	218	26.5	48	24	89	119.5	132	15	69	115.5	12	16
3000	22	1FZ1505-1CL5.-....	216	53	256	281	214.5	214.5	169	169	163	80.5	140	52	89	218	26.5	48	24	89	119.5	132	15	69	115.5	12	16
Shaft height 180 mm, cast iron frame																											
1500	18.5	1FZ5505-1EK2.-....	279	60	339	354	314	-	263	-	189	91	241	90	128	328	45	60	30	121	304.5	180	20	96.5	166	15	19
1500	22	1FZ5505-1EK4.-....	279	60	339	354	314	-	263	-	189	91	279	90	128	328	45	60	30	121	304.5	180	20	96.5	166	15	19
1500	30	1FZ5505-1EK5.-....	279	60	339	354	314	-	263	-	189	91	279	90	128	328	45	60	30	121	304.5	180	20	96.5	166	15	19
1500	37	1FZ5505-1EK6.-....	279	60	339	354	314	-	263	-	189	91	279	90	128	328	45	60	30	121	304.5	180	20	96.5	166	15	19
1500	45	1FZ5505-1EK7.-....	279	60	339	354	319	-	263	-	265	91	279	90	128	328	45	85	42.5	121	304.5	180	20	96.5	166	15	19
3000	30	1FZ5505-1EL3.-....	279	60	339	354	314	-	263	-	189	91	279	90	128	328	45	60	30	121	304.5	180	20	96.5	166	15	19
3000	37	1FZ5505-1EL4.-....	279	60	339	354	314	-	263	-	189	91	279	90	128	328	45	60	30	121	304.5	180	20	96.5	166	15	19
3000	45	1FZ5505-1EL5.-....	279	60	339	354	319	-	263	-	265	91	279	90	128	328	45	85	42.5	121	304.5	180	20	96.5	166	15	19
3000	55	1FZ5505-1EL6.-....	279	60	339	354	319	-	263	-	265	91	279	90	128	328	45	85	42.5	121	304.5	180	20	96.5	166	15	19
Shaft height 225 mm, cast iron frame																											
1500	55	1FZ5505-2BK2.-....	356	80	436	446	355	355	297	-	265	122	286	100	123	361	59	85	42.5	149	358	225	34	124	208	19	25
1500	75	1FZ5505-2BK3.-....	356	80	436	446	442	355	353	-	319	145	286	100	123	361	59	110	55	149	358	225	34	124	208	19	25
1500	90	1FZ5505-2BK4.-....	356	80	436	446	442	355	353	-	319	145	286	100	123	361	59	110	55	149	358	225	34	124	208	19	25
3000	75	1FZ5505-2BL2.-....	356	80	436	446	442	355	353	-	319	145	286	100	123	361	59	110	55	149	358	225	34	124	208	19	25
3000	90	1FZ5505-2BL3.-....	356	80	436	446	442	355	353	-	319	145	286	100	123	361	59	110	55	149	358	225	34	124	208	19	25
3000	110	1FZ5505-2BL4.-....	356	80	436	446	442	355	353	-	319	145	286	100	123	361	59	110	55	149	358	225	34	124	208	19	25
3000	132	1FZ5505-2BL5.-....	356	80	436	446	442	355	353	-	319	145	286	100	123	361	59	110	55	149	358	225	34	124	208	19	25
Shaft height 280 mm, cast iron frame																											
3000	110	1FZ1505-2DL3 .-...	457	100	540	551	433	433	345	345	319	145	368	101	152	479	20	110	55	190	267	280	40	160	210	24	30
3000	132	1FZ1505-2DL4 .-...	457	100	540	551	527	527	417	417	374	164	368	101	152	479	20	110	55	190	267	280	40	160	210	24	30
3000	160	1FZ1505-2DL5 .-...	457	100	540	551	527	527	417	417	374	164	368	101	152	479	20	110	55	190	267	280	40	160	210	24	30
3000	200	1FZ1505-2DL6 .-...	457	100	540	551	527	527	417	417	374	164	368	101	152	479	20	110	55	190	267	280	40	160	210	24	30
3000	250	1FZ1505-2DL7 .-...	457	100	540	551	527	527	417	417	374	164	368	101	152	479	20	110	55	190	267	280	40	160	210	24	30
1500	90	1FZ1505-2DK2 .-...	457	100	540	551	433	433	345	345	319	145	368	101	152	479	20	110	55	190	267	280	40	160	210	24	30
1500	110	1FZ1505-2DK3 .-...	457	100	540	551	433	433	345	345	319	145	368	101	152	479	20	110	55	190	267	280	40	160	210	24	30
1500	132	1FZ1505-2DK4 .-...	457	100	540	551	527	527	417	417	374	164	368	101	152	479	20	110	55	190	267	280	40	160	210	24	30
1500	160	1FZ1505-2DK5 .-...	457	100	540	551	527	527	417	417	374	164	368	101	152	479	20	110	55	190	267	280	40	160	210	24	30
1500	200	1FZ1505-2DK6 .-...	457	100	540	551	527	527	417	417	374	164	368	101	152	479	20	110	55	190	267	280	40	160	210	24	30

Dimension designation acc. to IEC

Rated speed [rpm]	Rated power [kW]	Motor type	L	LA	LC	LE	LL	D	DB	E	EB	ED	F	GA	DA	DC	EA	EC	EE	FA	GC	M	N	P	S	T	Z
			[mm]																								
Shaft height 132 mm, aluminum frame																											
1500	5.5	1FZ1005-1CK0.-....	465	12	535.5	80	130	38	M12	80	70	5	10	41	28	M10	60	50	5	8	31	265	230	300	14.5	4	4
1500	7.5	1FZ1005-1CK2.-....	465	12	535.5	80	130	38	M12	80	70	5	10	41	28	M10	60	50	5	8	31	265	230	300	14.5	4	4
1500	11	1FZ1005-1CK3.-....	465	12	535.5	80	130	38	M12	80	70	5	10	41	28	M10	60	50	5	8	31	265	230	300	14.5	4	4
1500	15	1FZ1005-1CK4.-....	515	12	585.5	80	130	38	M12	80	70	5	10	41	28	M10	60	50	5	8	31	265	230	300	14.5	4	4
3000	11	1FZ1005-1CL2.-....	465	12	535.5	80	130	38	M12	80	70	5	10	41	28	M10	60	50	5	8	31	265	230	300	14.5	4	4
3000	15	1FZ1005-1CL3.-....	465	12	535.5	80	130	38	M12	80	70	5	10	41	28	M10	60	50	5	8	31	265	230	300	14.5	4	4
3000	18.5	1FZ1005-1CL4.-....	465	12	535.5	80	130	38	M12	80	70	5	10	41	28	M10	60	50	5	8	31	265	230	300	14.5	4	4
3000	22	1FZ1005-1CL5.-....	465	12	535.5	80	130	38	M12	80	70	5	10	41	28	M10	60	50	5	8	31	265	230	300	14.5	4	4
Shaft height 132 mm, cast iron frame																											
1500	5.5	1FZ1505-1CK0.-....	466.5	12	535.5	80	134	38	M12	80	70	5	10	41	28	M10	60	50	5	8	31	265	230	300	14.5	4	4
1500	7.5	1FZ1505-1CK2.-....	466.5	12	535.5	80	134	38	M12	80	70	5	10	41	28	M10	60	50	5	8	31	265	230	300	14.5	4	4
1500	11	1FZ1505-1CK3.-....	466.5	12	535.5	80	134	38	M12	80	70	5	10	41	28	M10	60	50	5	8	31	265	230	300	14.5	4	4
1500	15	1FZ1505-1CK4.-....	516.5	12	585.5	80	134	38	M12	80	70	5	10	41	28	M10	60	50	5	8	31	265	230	300	14.5	4	4
3000	11	1FZ1505-1CL2.-....	466.5	12	535.5	80	134	38	M12	80	70	5	10	41	28	M10	60	50	5	8	31	265	230	300	14.5	4	4
3000	15	1FZ1505-1CL3.-....	466.5	12	535.5	80	134	38	M12	80	70	5	10	41	28	M10	60	50	5	8	31	265	230	300	14.5	4	4
3000	18.5	1FZ1505-1CL4.-....	466.5	12	535.5	80	134	38	M12	80	70	5	10	41	28	M10	60	50	5	8	31	265	230	300	14.5	4	4
3000	22	1FZ1505-1CL5.-....	466.5	12	535.5	80	134	38	M12	80	70	5	10	41	28	M10	60	50	5	8	31	265	230	300	14.5	4	4
Shaft height 180 mm, cast iron frame																											
1500	18.5	1FZ5505-1EK2.-....	770.5	13	886.5	110	164	48	M16	110	100	5	14	51.5	48	M16	110	100	5	14	51.5	300	250	350	18.5	5	4
1500	22	1FZ5505-1EK4.-....	770.5	13	886.5	110	164	48	M16	110	100	5	14	51.5	48	M16	110	100	5	14	51.5	300	250	350	18.5	5	4
1500	30	1FZ5505-1EK5.-....	770.5	13	886.5	110	164	48	M16	110	100	5	14	51.5	48	M16	110	100	5	14	51.5	300	250	350	18.5	5	4
1500	37	1FZ5505-1EK6.-....	770.5	13	886.5	110	164	48	M16	110	100	5	14	51.5	48	M16	110	100	5	14	51.5	300	250	350	18.5	5	4
1500	45	1FZ5505-1EK7.-....	770.5	13	886.5	110	197	48	M16	110	100	5	14	51.5	48	M16	110	100	5	14	51.5	300	250	350	18.5	5	4
3000	30	1FZ5505-1EL3.-....	770.5	13	886.5	110	164	48	M16	110	100	5	14	51.5	48	M16	110	100	5	14	51.5	300	250	350	18.5	5	4
3000	37	1FZ5505-1EL4.-....	770.5	13	886.5	110	164	48	M16	110	100	5	14	51.5	48	M16	110	100	5	14	51.5	300	250	350	18.5	5	4
3000	45	1FZ5505-1EL5.-....	770.5	13	886.5	110	197	48	M16	110	100	5	14	51.5	48	M16	110	100	5	14	51.5	300	250	350	18.5	5	4
3000	55	1FZ5505-1EL6.-....	770.5	13	886.5	110	197	48	M16	110	100	5	14	51.5	48	M16	110	100	5	14	51.5	300	250	350	18.5	5	4
Shaft height 225 mm, cast iron frame																											
1500	55	1FZ5505-2BK2.-....	893	16	1008	60	197	60	M20	140	125	7.5	18	64	55	M20	110	100	5	16	59	400	350	450	18.5	5	8
1500	75	1FZ5505-2BK3.-....	893	16	1008	60	232	60	M20	140	125	7.5	18	64	55	M20	110	100	5	16	59	400	350	450	18.5	5	8
1500	90	1FZ5505-2BK4.-....	893	16	1008	60	232	60	M20	140	125	7.5	18	64	55	M20	110	100	5	16	59	400	350	450	18.5	5	8
3000	75	1FZ5505-2BL2.-....	863	16	1008	55	232	55	M20	110	100	5	16	59	48	M16	110	100	5	14	51.5	400	350	450	18.5	5	8
3000	90	1FZ5505-2BL3.-....	863	16	1008	55	232	55	M20	110	100	5	16	59	48	M16	110	100	5	14	51.5	400	350	450	18.5	5	8
3000	110	1FZ5505-2BL4.-....	863	16	1008	55	232	55	M20	110	100	5	16	59	48	M16	110	100	5	14	51.5	400	350	450	18.5	5	8
3000	132	1FZ5505-2BL5.-....	863	16	1008	55	232	55	M20	110	100	5	16	59	48	M16	110	100	5	14	51.5	400	350	450	18.5	5	8
Shaft height 280 mm, cast iron frame																											
3000	110	1FZ1505-2DL3 .-...	960	18	1105	140	233	65	M20	140	125	10	18	69	60	M20	140	125	10	18	64	500	450	550	15.8	5	8
3000	132	1FZ1505-2DL4 .-...	960	18	1105	140	299	65	M20	140	125	10	18	69	60	M20	140	125	10	18	64	500	450	550	15.8	5	8
3000	160	1FZ1505-2DL5 .-...	960	18	1105	140	299	65	M20	140	125	10	18	69	60	M20	140	125	10	18	64	500	450	550	15.8	5	8
3000	200	1FZ1505-2DL6 .-...	1070	18	1215	140	299	65	M20	140	125	10	18	69	60	M20	140	125	10	18	64	500	450	550	15.8	5	8
3000	250	1FZ1505-2DL7 .-...	1070	18	1215	140	299	65	M20	140	125	10	18	69	60	M20	140	125	10	18	64	500	450	550	15.8	5	8
1500	90	1FZ1505-2DK2 .-...	960	18	1105	140	233	75	M20	140	125	10	20	79.5	65	M20	140	125	10	18	69	500	450	550	15.8	5	8
1500	110	1FZ1505-2DK3 .-...	960	18	1105	140	233	75	M20	140	125	10	20	79.5	65	M20	140	125	10	18	69	500	450	550	15.8	5	8
1500	132	1FZ1505-2DK4 .-...	1070	18	1215	140	299	75	M20	140	125	10	20	79.5	65	M20	140	125	10	18	69	500	450	550	15.8	5	8
1500	160	1FZ1505-2DK5 .-...	1070	18	1215	140	299	75	M20	140	125	10	20	79.5	65	M20	140	125	10	18	69	500	450	550	15.8	5	8
1500	200	1FZ1505-2DK6 .-...	1070	18	1215	140	299	75	M20	140	125	10	20	79.5	65	M20	140	125	10	18	69	500	450	550	15.8	5	8

Dimension designation acc. to IEC

reliable motion for a better tomorrow

Looking for more information?
Check out these web sites:

innomotics.com

portal.innomotics.com

Catalogue

PM motors webpage

Publisher information:
Innomotics GmbH, Vogelweiherstr. 1 – 15, 90441 Nuremberg, Germany
Printed in Germany

© Innomotics 2025

The Siemens Businesses **Large Drives Applications** and **Low Voltage Motors** have been transferred to **Innomotics**. The brand change from Siemens to Innomotics is ongoing. Siemens' or Innomotics' legal information, trademarks or logos contained in product related documents **do not necessarily represent the actual branding** used for the products. Any technical product information remains valid **independently of the brand**. **Orders** received as of **August 1, 2024**, will be confirmed exclusively with the product mark **"Innomotics"** regarding the concerned products and services. Independent of the order date, all ordered products or services with **delivery** dates from **April 1, 2025**, will be delivered with the product mark "Innomotics".

SIEMENS and SINAMICS are registered trademarks of Siemens AG or its affiliated companies whose use by third parties for their own purposes could violate the rights of the respective owner.

INLVM-B10001-00-76DE